Hitachi Advanced Server HA800 Series

Troubleshooting Guide

This document describes common procedures and solutions for the many levels of troubleshooting servers. This document is intended for the person who installs, administers, and troubleshoots servers and server blades. Hitachi Vantara assumes you are qualified to service computer equipment and are trained in recognizing hazards in products with hazardous energy levels.

MK-90HAS8008-00
December 2020

© 2020 Hitachi Vantara LLC. All rights reserved.

No part of this publication may be reproduced or transmitted in any form or by any means, electronic or mechanical, including copying and recording, or stored in a database or retrieval system for commercial purposes without the express written permission of Hitachi, Ltd., or Hitachi Vantara LLC (collectively "Hitachi"). Licensee may make copies of the Materials provided that any such copy is: (i) created as an essential step in utilization of the Software as licensed and is used in no other manner; or (ii) used for archival purposes. Licensee may not make any other copies of the Materials. "Materials" mean text, data, photographs, graphics, audio, video and documents.

Hitachi reserves the right to make changes to this Material at any time without notice and assumes no responsibility for its use. The Materials contain the most current information available at the time of publication.

Some of the features described in the Materials might not be currently available. Refer to the most recent product announcement for information about feature and product availability, or contact Hitachi Vantara LLC at https://support.hitachivantara.com/en_us/contact-us.html.

Notice: Hitachi products and services can be ordered only under the terms and conditions of the applicable Hitachi agreements. The use of Hitachi products is governed by the terms of your agreements with Hitachi Vantara LLC.

By using this software, you agree that you are responsible for:

1. Acquiring the relevant consents as may be required under local privacy laws or otherwise from authorized employees and other individuals; and
2. Verifying that your data continues to be held, retrieved, deleted, or otherwise processed in accordance with relevant laws.

Notice on Export Controls. The technical data and technology inherent in this Document may be subject to U.S. export control laws, including the U.S. Export Administration Act and its associated regulations, and may be subject to export or import regulations in other countries. Reader agrees to comply strictly with all such regulations and acknowledges that Reader has the responsibility to obtain licenses to export, re-export, or import the Document and any Compliant Products.

Hitachi and Lumada are trademarks or registered trademarks of Hitachi, Ltd., in the United States and other countries.

AIX, AS/400e, DB2, Domino, DS6000, DS8000, Enterprise Storage Server, eServer, FICON, FlashCopy, GDPS, HyperSwap, IBM, Lotus, MVS, OS/390, PowerHA, PowerPC, RS/6000, S/390, System z9, System z10, Tivoli, z/OS, z9, z10, z13, z14, z/VM, and z/VSE are registered trademarks or trademarks of International Business Machines Corporation.

Active Directory, ActiveX, Bing, Excel, Hyper-V, Internet Explorer, the Internet Explorer logo, Microsoft, the Microsoft Corporate Logo, MS-DOS, Outlook, PowerPoint, SharePoint, Silverlight, SmartScreen, SQL Server, Visual Basic, Visual C++, Visual Studio, Windows, the Windows logo, Windows Azure, Windows PowerShell, Windows Server, the Windows start button, and Windows Vista are registered trademarks or trademarks of Microsoft Corporation. Microsoft product screen shots are reprinted with permission from Microsoft Corporation.

All other trademarks, service marks, and company names in this document or website are properties of their respective owners.

Copyright and license information for third-party and open source software used in Hitachi Vantara products can be found at https://www.hitachivantara.com/en-us/company/legal.html.

Preface

This document describes common procedures and solutions for the many levels of troubleshooting servers. This document is intended for the person who installs, administers, and troubleshoots servers and server blades. Hitachi Vantara assumes you are qualified to service computer equipment and are trained in recognizing hazards in products with hazardous energy levels.

Please read this document carefully to understand how to use these products, and maintain a copy for your reference.

Accessing product documentation

Product user documentation is available on Hitachi Vantara Support Connect: https://knowledge.hitachivantara.com/Documents. Check this site for the most current documentation, including important updates that may have been made after the release of the product.

Getting help

Hitachi Vantara Support Connect is the destination for technical support of products and solutions sold by Hitachi Vantara. To contact technical support, log on to Hitachi Vantara Support Connect for contact information: https://support.hitachivantara.com/en_us/contact-us.html.

Hitachi Vantara Community is a global online community for Hitachi Vantara customers, partners, independent software vendors, employees, and prospects. It is the destination to get answers, discover insights, and make connections. **Join the conversation today!** Go to community.hitachivantara.com, register, and complete your profile.

Comments

Please send us your comments on this document to doc.comments@hitachivantara.com. Include the document title and number, including the revision level (for example, -07), and refer to specific sections and paragraphs whenever possible. All comments become the property of Hitachi Vantara LLC.

Thank you!

Table of Contents

Component identification 9

Front panel components 9
- 8 SFF 9
- 4 LFF 9
- 10 SFF NVMe/SAS Combo 10

Front panel LEDs and buttons 11
- 8 SFF/10 SFF 11
- 4 LFF 13
- UID button functionality 14
- Front panel LED power fault codes 14

Systems Insight Display LEDs 14
Systems Insight Display combined LED descriptions 16
Rear panel components 18
Rear panel LEDs 18
System board components 20
- System maintenance switch descriptions 21
- NMI functionality 21
- DIMM slot locations 22
- DIMM label identification 22
- NVDIMM identification 23
- NVDIMM LED identification 25
- Persistent Memory module label identification 26

Processor, heatsink, and socket components 28
Device numbers 28
- 8 SFF device bay numbering 28
- 8 SFF + 2 SFF device bay numbering 29
- 4 LFF device bay numbering 29
- 10 SFF NVMe/SAS backplane option device bay numbering 29
- Optional rear device bay numbering 29

Hot-plug drive LED definitions 30
NVMe SSD LED definitions 31
uFF drive components and LEDs 33
Hot-plug fans 34
Smart array P824i-p MR Controller 36
Infiniband HDR/Ethernet 940QSFP 56x16 adapter LEDs 37
DSC-25 2-port SFP28 card ports and LEDs 37

Operations 40

Power up the server 40
Power down the server 40
Extend the server from the rack 40
Remove the server from the rack 41
Remove the access panel 41
Install the access Panel 41
Remove the hot-plug fan 42
Remove the primary PCI riser cage 43
Install the primary PCI riser cage 44
Remove the secondary PCI riser cage 45
Install the secondary PCI riser cage 46

Remove the 8 SFF drive backplane 47
Release the cable management arm..... 47

Setup..... 48
Optimum environment 48
Space and airflow requirements..... 48
Temperature requirements 49
Power requirements..... 49
Electrical grounding requirements 50
Connecting a DC power cable to a DC power source 50
Server warnings and cautions 51
Rack warnings 52
Identifying the contents of the server shipping carton..... 53
Installing hardware options 53
Installing the server into the rack 53
Operating system 54
Installing the operating system with Intelligent Provisioning 54
Selecting boot options in UEFI Boot Mode 55
Selecting boot options 55
Registering the server 55

Hardware options installation 56
Introduction 56
Installing a redundant hot-plug power supply..... 56
Memory options..... 57
DIMM-processor compatibility..... 58
Installing a DIMM..... 58
16GB NVDIMM option..... 59
Persistent Memory option..... 63
Installing a high-performance fan..... 66
Drive options..... 68
Hot-plug drive guidelines..... 68
Removing the hard drive blank..... 68
Installing a hot-plug SAS or SATA drive..... 69
Removing a hot-plug SAS or SATA hard drive..... 70
Installing the NVMe drives..... 70
Removing and replacing an NVMe drive 72
Installing a uFF drive and SCM drive carrier 72
Removing and replacing a uFF drive..... 73
Installing an 8 SFF optical drive 74
Universal media bay options..... 76
Installing a 2 SFF SAS/SATA drive cage 76
Installing a 2 SFF NVMe drive cage option 78
Installing a 2 SFF Smart Carrier M.2 (SCM) drive cage..... 81
Installing an 8 SFF display port/USB/optical blank option 84
Installing the 4 LFF optical drive option 85
Installing the rear drive riser cage option 88
Primary PCI riser cage options 91
Installing an optional primary PCI riser board 91
Installing the SATA M.2 2280 riser option..... 93
Installing an expansion board in the primary riser cage..... 95
Installing an accelerator or GPU in the primary riser cage 97

Secondary PCI riser options ... 98
Installing a secondary full-height PCI riser cage option ... 98
Installing a secondary low-profile PCIe slot riser cage option ... 102
Installing an expansion board in the secondary riser cage ... 103
Installing an accelerator or GPU in the secondary riser cage ... 106
Smart array controller options ... 109
Installing a smart array P408i-a SR Controller option ... 109
Installing a smart array P408i-p SR Controller option ... 112
Installing a smart array P816i-a SR Controller option ... 115
Installing a smart array P824i-p MR controller in a configured server ... 118
Installing the operating system with the smart array MR P824i-p controller driver ... 119
Processor and heatsink options ... 120
Installing a processor heatsink assembly ... 120
Installing a high-performance heatsink ... 122
Processor, heatsink, and socket components ... 126
Installing the Systems Insight Display power module ... 127
Installing the 4 LFF display port/USB module ... 131
Installing the serial cable option ... 133
Installing the Chassis Intrusion Detection switch option ... 135
Installing the FlexibleLOM option ... 137
Energy pack options ... 138
Smart Storage Hybrid Capacitor ... 139
Minimum firmware versions ... 139
Energy pack option configurations ... 139
Trusted Platform Module 2.0 option ... 144
Overview ... 144
Trusted Platform Module 2.0 Guidelines ... 145
Installing and enabling the TPM 2.0 option ... 145

Cabling ... 151
Cabling overview ... 151
SFF configuration cable routing ... 152
Additional SFF cabling ... 156
LFF cables ... 157
LFF configuration cable routing ... 158
Additional LFF cabling ... 158

Software and configuration utilities ... 159
Server mode ... 159
Active Health System ... 159
iLO 5 ... 161
iLO Federation ... 161
iLO Service Port ... 161
iLO RESTful API ... 162
RESTful Interface Tool ... 162
Intelligent Provisioning ... 162
Intelligent Provisioning operation ... 163
Management security ... 163
UEFI System Utilities ... 164
Selecting the boot mode ... 164
Secure Boot ... 165
Launching the Embedded UEFI Shell ... 165

Smart Storage Administrator 166
MR Storage Administrator 167
StorCLI 168
USB support 168
External USB functionality 168
Redundant ROM support 168
Safety and security benefits 168
Keeping the system current 168
Updating firmware or system ROM 168
Drivers 170
Software and firmware 171
Operating system version support 171

Troubleshooting 173
Troubleshooting resources 173

Removing and replacing the system battery 174

Specifications 175
Environmental specifications 175
Server specifications 175
Power supply specifications 177
800W Flex Slot Platinum Hot-plug Low Halogen Power Supply 178
800W Flex Slot Titanium Hot-plug Low Halogen Power Supply 179
800W Flex Slot Universal Hot-plug Low Halogen Power Supply 180
800W Flex Slot -48VDC Hot-plug Low Halogen Power Supply 181
1600W Flex Slot Platinum Hot-plug Low Halogen Power Supply 182

Component identification

Front panel components

8 SFF

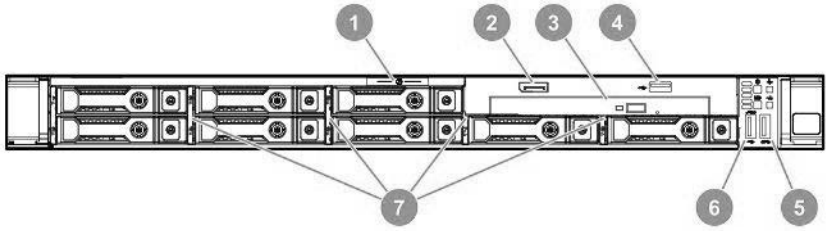

Item	Description
1	Serial label pull tab
2	Display port (optional)
3	Optical drive (optional)
4	USB 2.0 port (optional)
5	USB 3.0 port
6	iLO Service Port The operating system does not recognize this port as a USB port.
7	SAS/SATA drive bays

4 LFF

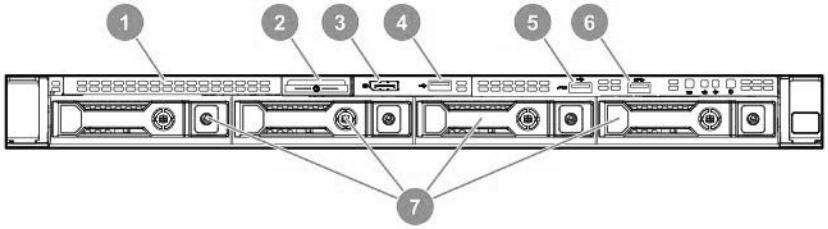

Item	Description
1	Optical drive blank (optional)
2	Serial label pull tab
3	Display port (optional)
4	USB 2.0 port (optional)

Table Continued

Item	Description
5	iLO Service Port The operating system does not recognize this port as a USB port.
6	USB 3.0 port
7	SAS/SATA drive bays

10 SFF NVMe/SAS Combo

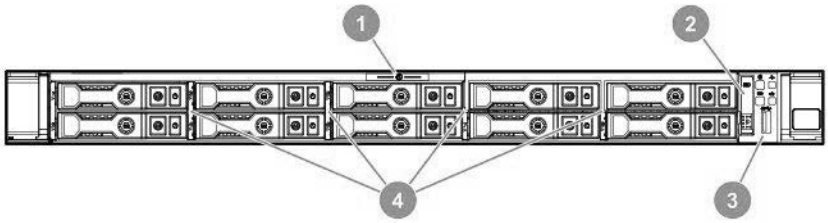

Item	Description
1	Serial label pull tab
2	Systems Insight Display (optional)
3	USB 3.0 port
4	SAS/SATA/NVMe drive bays When the 10 SFF NVMe/SAS backplane option is installed, NVMe drives must be installed in bays 9 and 10. The other bays support a mix of NVMe and SAS drives.

Front panel LEDs and buttons

8 SFF/10 SFF

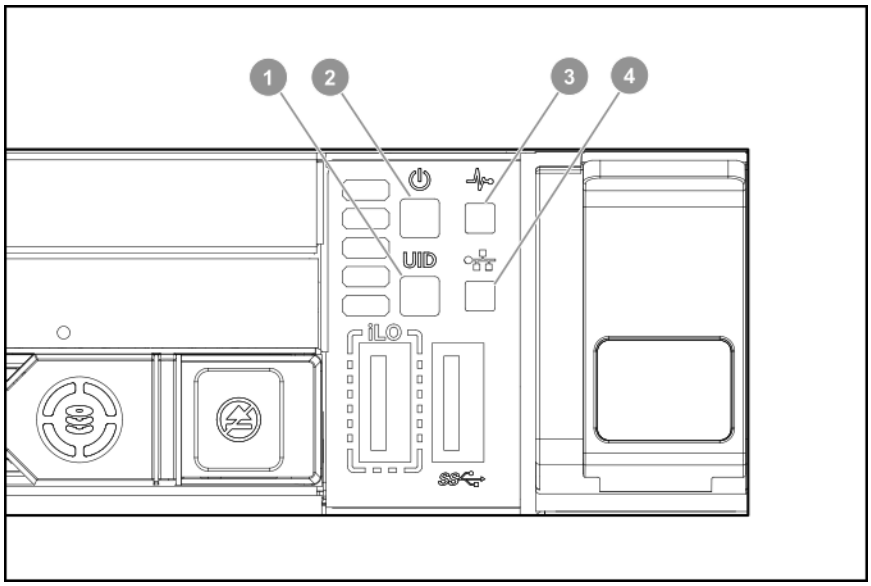

Item	Description	Status
1	UID button/LED[1]	Solid blue = Activated Flashing blue: • 1 Hz = Remote management or firmware upgrade in progress • 4 Hz = iLO manual reboot sequence initiated • 8 Hz = iLO manual reboot sequence in progress Off = Deactivated
2	Power On/Standby button and system power LED[1]	Solid green = System on Flashing green = Performing power on sequence

		Solid amber = System in standby Off = No power present[2]
3	Health LED[1]	Solid green = Normal Flashing green = iLO is rebooting. Flashing amber = System degraded Flashing red = System critical[3]
4	NIC status LED[1]	Solid green = Link to network Flashing green = Network active Off = No network activity

[1] When all four LEDs described in this table flash simultaneously, a power fault has occurred.

[2] Facility power is not present, power cord is not attached, no power supplies are installed, power supply failure has occurred, or the power button cable is disconnected.

[3] If the health LED indicates a degraded or critical state, use iLO to review the system health status.

4 LFF

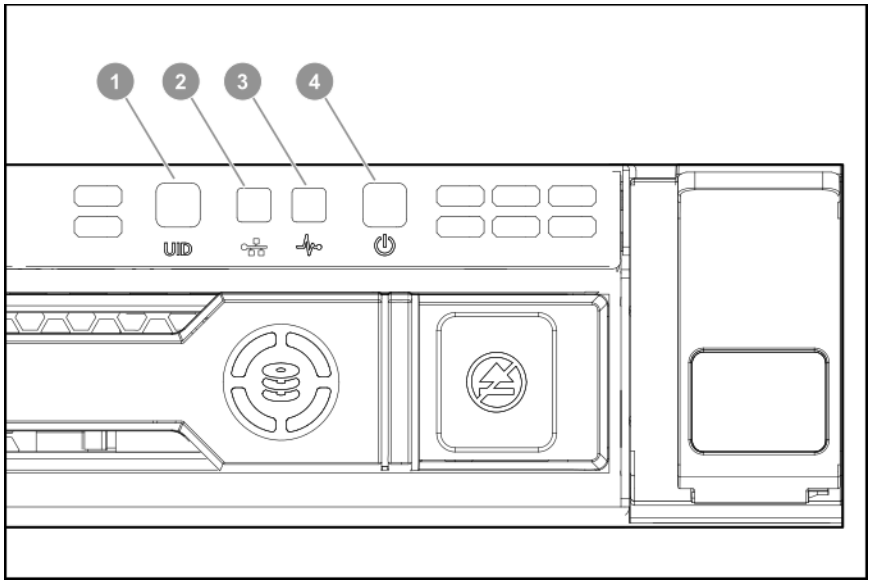

Item	Description	Status
1	UID button/LED[1]	Solid blue = Activated. Flashing blue: • 1 Hz = Remote management or firmware upgrade in progress. • 4 Hz = iLO manual reboot sequence initiated. • 8 Hz = iLO manual reboot sequence in progress. Off = Deactivated.
2	NIC status LED[1]	Solid green = Link to network. Flashing green = Network active. Off = No network activity.

Table Continued

Item	Description	Status
3	Health LED[1]	Solid green = Normal. Flashing green = iLO is rebooting. Flashing amber = System degraded. Flashing red = System critical.[2]
4	Power On/Standby button and system power LED[1]	Solid green = System on. Flashing green = Performing power on sequence. Solid amber = System in standby. Off = No power present.[3]

[1] When all four LEDs described in this table flash simultaneously, a power fault has occurred.

[2] To identify components in a degraded or critical state, see the Systems Insight Display LEDs, check iLO/BIOS logs, and reference the server troubleshooting guide.

[3] Facility power is not present, power cord is not attached, no power supplies are installed, power supply failure has occurred, or the power button cable is disconnected.

UID button functionality

The UID button can be used to display the Server Health Summary when the server will not power on. For more information, see the latest *iLO User Guide*.

Front panel LED power fault codes

The following table provides a list of power fault codes, and the subsystems that are affected. Not all power faults are used by all servers.

Subsystem	LED behavior
System board	1 flash
Processor	2 flashes
Memory	3 flashes
Riser board PCIe slots	4 flashes
FlexibleLOM	5 flashes
Storage controllers	6 flashes
System board PCIe slots	7 flashes
Power backplane or storage backplane	8 flashes
Power supply	9 flashes

Systems Insight Display LEDs

The Systems Insight Display LEDs represent the system board layout. The display enables diagnosis with the access panel installed.

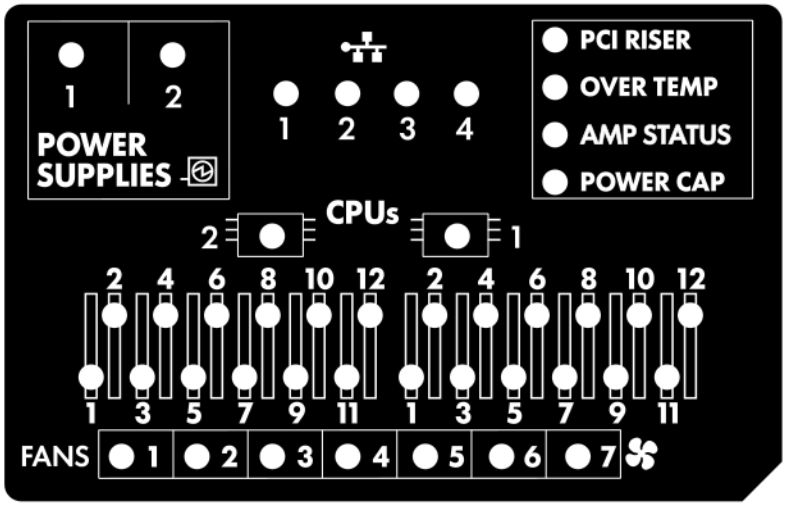

Description	Status
Processor LEDs	Off = Normal Amber = Failed processor
DIMM LEDs	Off = Normal Amber = Failed DIMM or configuration issue
Fan LEDs	Off = Normal Amber = Failed fan or missing fan
NIC LEDs[1]	Off = No link to network Solid green = Network link Flashing green = Network link with activity If power is off, the front panel LED is not active. For status, see **Rear panel LEDs**.
Power supply LEDs	Off = Normal Solid amber = Power subsystem degraded, power supply failure, or input power lost.
PCI riser LED	Off = Normal Amber = Incorrectly installed PCI riser cage

Table Continued

Description	Status
Over temp LED	Off = Normal Amber = High system temperature detected
Amp Status LED	Off = AMP modes disabled Solid green = AMP mode enabled Solid amber = Failover Flashing amber = Invalid configuration
Power cap LED	Off = System is in standby, or no cap is set. Solid green = Power cap applied

[1] For Networking Choice (NC) server models, the embedded NIC ports are not equipped on the server. Therefore, the NIC LEDs on the Systems Insight Display will flash based on the FlexibleLOM network port activity. In the case of a dual-port FlexibleLOM, only NIC LED 1 and 2 will illuminate to correspond with the activity of the respective network ports.

When the health LED on the front panel illuminates either amber or red, the server is experiencing a health event. For more information on the combination of these LEDs, see **Systems Insight Display combined LED descriptions**.

Systems Insight Display combined LED descriptions

The combined illumination of the following LEDs indicates a system condition:

- Systems Insight Display LEDs
- System power LED
- Health LED

Systems Insight Display LED and color	Health LED power	System LED	Status
Processor (amber)	Red	Amber	One or more of the following conditions might exist: • Processor in socket X has failed. • Processor X is not installed in the socket. • Processor X is unsupported. • ROM detects a failed processor during POST.
Processor (amber)	Amber	Green	Processor in socket X is in a pre-failure condition.
DIMM (amber)	Red	Green	One or more DIMMs have failed.

Table Continued

Systems Insight Display LED and color	Health LED power	System LED	Status
DIMM (amber)	Amber	Green	DIMM in slot X is in a pre-failure condition.
Over temp (amber)	Amber	Green	The Health Driver has detected a cautionary temperature level.
Over temp (amber)	Red	Amber	The server has detected a hardware critical temperature level.
PCI riser (amber)	Red	Green	The PCI riser cage is not seated
properly. Fan (amber)	Amber	Green	One fan has failed or has been
removed.			
Fan (amber)	Red	Green	Two or more fans have failed or been removed.
Power supply (amber)	Red	Amber	One or more of the following conditions might exist: • Only one power supply is installed and that power supply is in standby. • Power supply fault. • System board fault.
Power supply (amber)	Amber	Green	One or more of the following conditions might exist: • Redundant power supply is installed and only one power supply is functional. • AC power cord is not plugged into redundant power supply. • Redundant power supply fault. • Power supply mismatch at POST or power supply mismatch through hot- plug addition.
Power cap (off)	—	Amber	Standby.
Power cap (green)	—	Flashing green	Waiting for power.
Power cap (green)	—	Green	Power is available.
Power cap (flashing amber)	—	Amber	Power is not available.

IMPORTANT: If more than one DIMM slot LED is illuminated, further troubleshooting is required. Test each bank of DIMMs by removing all other DIMMs. Isolate the failed DIMM by replacing each DIMM in a bank with a known working DIMM.

Rear panel components

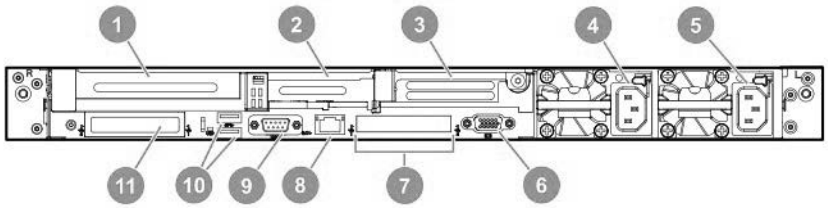

Item	Description
1	Slot 1 PCIe3
2	Slot 2 PCIe3
3	Slot 3 PCIe3 (optional - requires second processor)
4	Power supply 2 (PS2)
5	Power supply 1 (PS1)
6	Video port
7	NIC ports (if equipped)
8	iLO Management Port
9	Serial port (optional)
10	USB 3.0 ports
11	FlexibleLOM (optional)

Rear panel LEDs

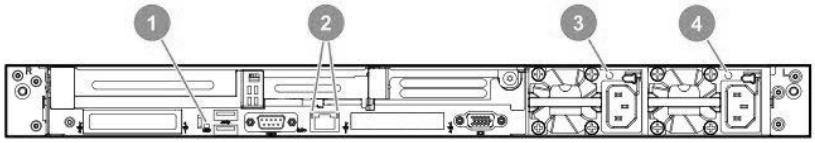

Item	Description	Status
1	UID LED	Solid blue = Identification is activated. Flashing blue = System is being managed remotely. Off = Identification is deactivated.
2R	iLO 5/standard NIC activity LED	Solid green = Activity exists. Flashing green = Activity exists. Off = No activity exists.
2L	iLO 5/standard NIC link LED	Solid green = Link exists. Off = No link exists.
3	Power supply 2 LED	Solid green = Normal Off = One or more of the following conditions exists: • AC power unavailable • Power supply failed • Power supply in standby mode • Power supply exceeded current limit.
4	Power supply 1 LED	Solid green = Normal Off = One or more of the following conditions exists: • AC power unavailable • Power supply failed • Power supply in standby mode • Power supply exceeded current limit.

System board components

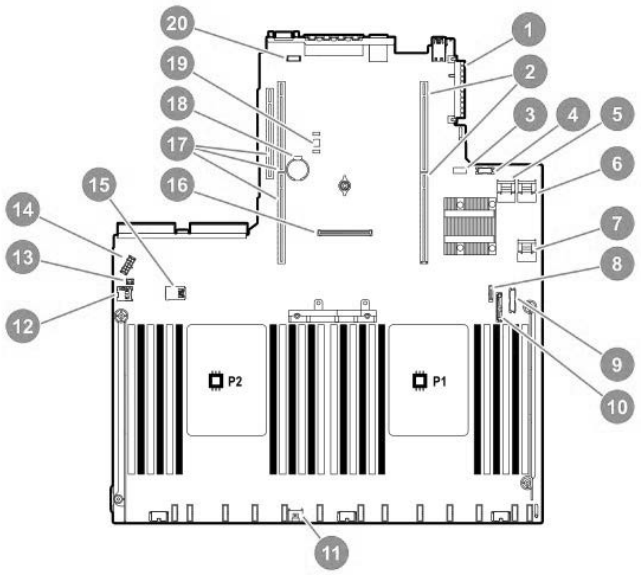

Item	Description
1	FlexibleLOM connector
2	Primary (processor 1) PCIe riser connector
3	System maintenance switch
4	Front display port/USB 2.0 connector
5	x4 SATA port 1
6	x4 SATA port 2
7	x2 SATA port 3
8	x1 SATA port 4
9	Front power/USB 3.0 connector
10	Optical/SATA port 5
11	Energy pack connector
12	microSD card slot
13	Chassis Intrusion Detection connector
14	Drive backplane power connector
15	Dual internal USB 3.0 connector
16	Type-a SmartArray connector
17	Secondary (processor 2) PCIe riser connector
18	System battery
19	TPM connector (optional)
20	Serial port connector (optional)

System maintenance switch descriptions

Position	Default	Function
S1[1]	Off	Off = iLO security is enabled. On = iLO security is disabled.
S2	Off	Reserved
S3	Off	Reserved
S4	Off	Reserved
S5[1]	Off	Off = Power-on password is enabled. On = Power-on password is disabled.
S6[1, 2, 3]	Off	Off = No function On = Restore default manufacturing settings
S7	Off	Reserved
S8	—	Reserved
S9	—	Reserved
S10	—	Reserved
S11	—	Reserved
S12	—	Reserved

[1] To access the redundant ROM, set S1, S5, and S6 to On.

[2] When the system maintenance switch position 6 is set to the On position, the system is prepared to restore all configuration settings to their manufacturing defaults.

[3] When the system maintenance switch position 6 is set to the On position and Secure Boot is enabled, some configurations cannot be restored. For more information, see **Secure Boot**.

NMI functionality

An NMI crash dump enables administrators to create crash dump files when a system is hung and not responding to traditional debugging methods.

An analysis of the crash dump log is an essential part of diagnosing reliability problems, such as hanging operating systems, device drivers, and applications. Many crashes freeze a system, and the only available action for administrators is to cycle the system power. Resetting the system erases any information that could support problem analysis, but the NMI feature preserves that information by performing a memory dump before a hard reset.

To force the OS to initiate the NMI handler and generate a crash dump log, the administrator can use the iLO Generate NMI feature.

DIMM slot locations

DIMM slots are numbered sequentially (1 through 12) for each processor.

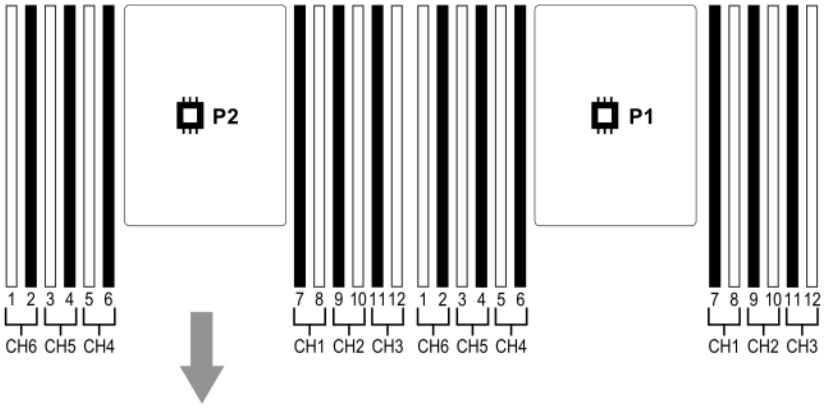

DIMM label identification

To determine DIMM characteristics, see the label attached to the DIMM. The information in this section helps you to use the label to locate specific information about the DIMM.

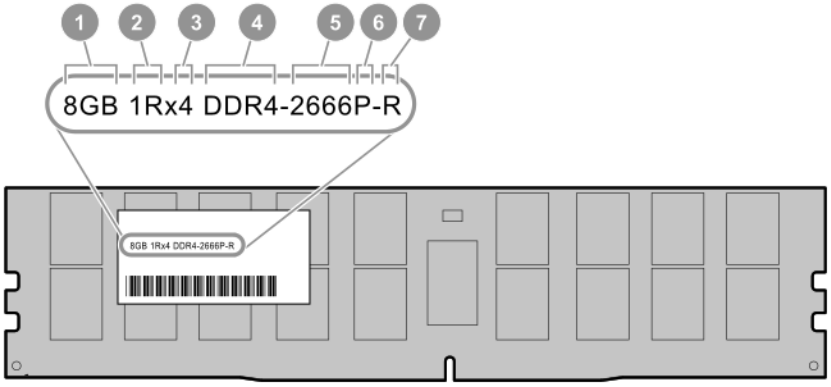

Item	Description	Example
1	Capacity	8 GB 16 GB 32 GB 64 GB 128 GB
2	Rank	1R = Single rank 2R = Dual rank 4R = Quad rank 8R = Octal rank

Table Continued

Item	Description	Example
3	Data width on DRAM	x4 = 4-bit x8 = 8-bit x16 = 16-bit
4	Memory generation	PC4 = DDR4
5	Maximum memory speed	2133 MT/s 2400 MT/s 2666 MT/s 2933 MT/s
6	CAS latency	P = CAS 15-15-15 T = CAS 17-17-17 U = CAS 20-18-18 V = CAS 19-19-19 (for RDIMM, LRDIMM) V = CAS 22-19-19 (for 3DS TSV LRDIMM) Y = CAS 21-21-21 (for RDIMM, LRDIMM) Y = CAS 24-21-21 (for 3DS TSV LRDIMM)
7	DIMM type	R = RDIMM (registered) L = LRDIMM (load reduced) E = Unbuffered ECC (UDIMM)

NVDIMM identification

NVDIMMs are supported only when first-generation Intel Xeon Scalable processors are installed on the server. NVDIMM boards are blue instead of green. This change to the color makes it easier to distinguish NVDIMMs from DIMMs. To determine NVDIMM characteristics, see the full product description as shown in the following example:

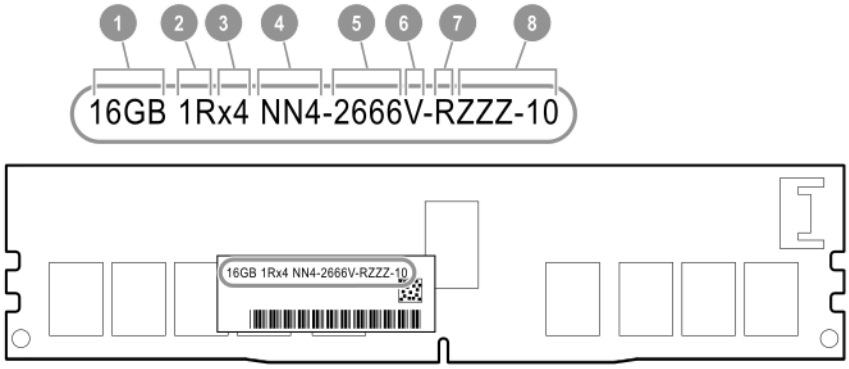

Item	Description	Definition
1	Capacity	16 GiB
2	Rank	1R (Single rank)
3	Data width per DRAM chip	x4 (4 bit)
4	Memory type	NN4=DDR4 NVDIMM-N
5	Maximum memory speed	2667 MT/s
6	Speed grade	V (latency 19-19-19)
7	DIMM type	RDIMM (registered)
8	Other	—

NVDIMM 2D Data Matrix barcode

The 2D Data Matrix barcode is on the right side of the NVDIMM label and can be scanned by a cell phone or other device.

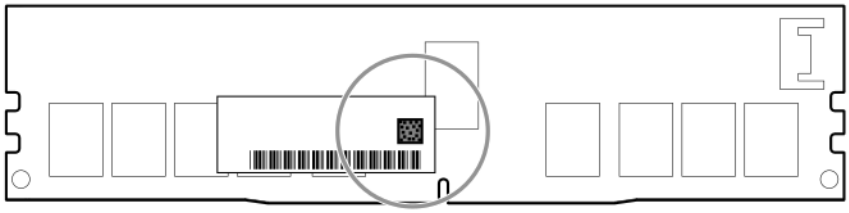

When scanned, the following information from the label can be copied to your cell phone or device:

- (P) is the module part number.
- (L) is the technical details shown on the label.
- (S) is the module serial number.

Example: (P)HMN82GR7AFR4N-VK (L)16GB 1Rx4 NN4-2666V-RZZZ-10(S)80AD-01-1742-11AED5C2

NVDIMM LED identification

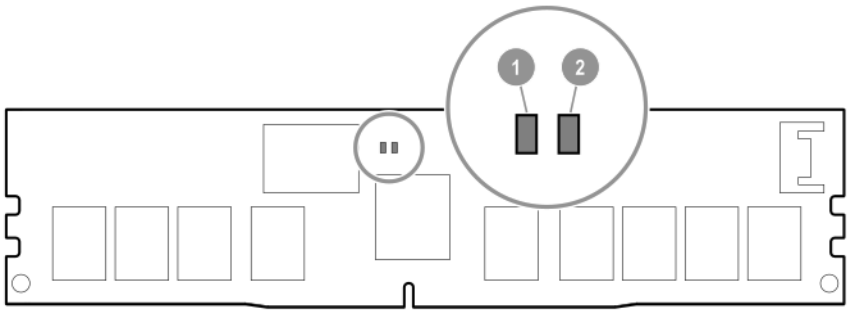

Item	LED description	LED color
1	Power LED	Green
2	Function LED	Blue

NVDIMM-N LED combinations

State	Definition	NVDIMM-N Power LED (green)	NVDIMM-N Function LED (blue)
0	AC power is on (12V rail) but the NVM controller is not working or not ready.	On	Off
1	AC power is on (12V rail) and the NVM controller is ready.	On	On
2	AC power is off or the battery is off (12V rail off).	Off	Off
3	AC power is on (12V rail) or the battery is on (12V rail) and the NVDIMM-N is active (backup and restore).	On	Flashing

NVDIMM Function LED patterns

For the purpose of this table, the NVDIMM-N LED operates as follows:

- Solid indicates that the LED remains in the on state.
- Flashing indicates that the LED is on for 2 seconds and off for 1 second.
- Fast-flashing indicates that the LED is on for 300 ms and off for 300 ms.

State	Definition	NVDIMM-N Function LED
0	The restore operation is in progress.	Flashing
1	The restore operation is successful.	Solid or On
2	Erase is in progress.	Flashing
3	The erase operation is successful.	Solid or On

Table Continued

State	Definition	NVDIMM-N Function LED
4	The NVDIMM-N is armed, and the NVDIMM-N is in normal operation.	Solid or On
5	The save operation is in progress.	Flashing
6	The NVDIMM-N finished saving and battery is still turned on (12 V still powered).	Solid or On
7	The NVDIMM-N has an internal error or a firmware update is in progress. For more information about an NVDIMM-N internal error, see the IML.	Fast-flashing

Persistent Memory module label identification

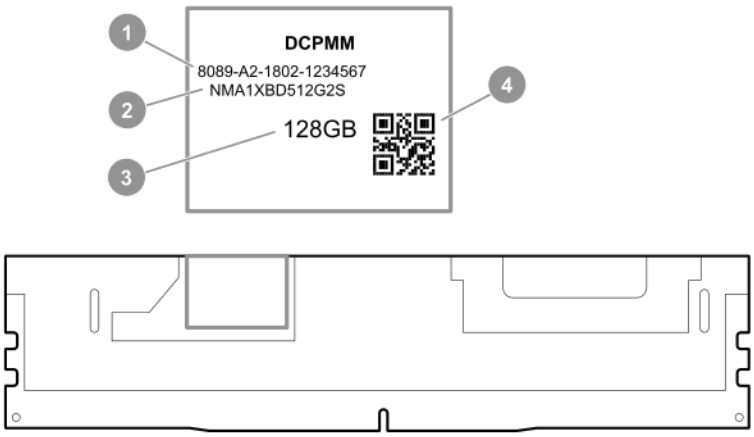

Item	Description	Example
1	Unique ID number	8089-A2-1802-1234567
2	Model number	NMA1XBD512G2S
3	Capacity	128 GB 256 GB 512 GB
4	QR code	Includes part number and serial number

Processor, heatsink, and socket components

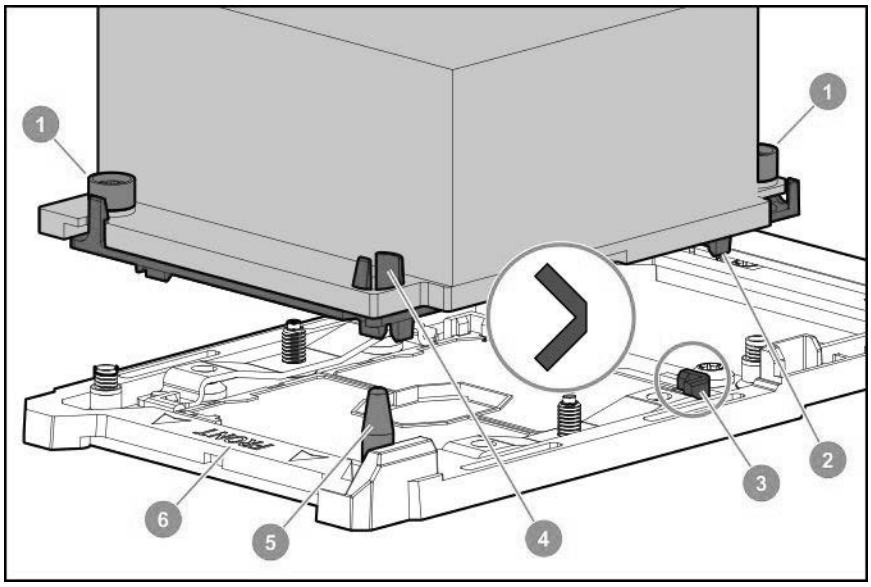

Item	Description
1	Heatsink nuts
2	Processor carrier
3	Pin 1 indicator [1]
4	Heatsink guide/keying feature
5	Alignment post
6	Heatsink keying frame

[1] Symbol also on the processor and frame.

Device numbers

8 SFF device bay numbering

8 SFF + 2 SFF device bay numbering

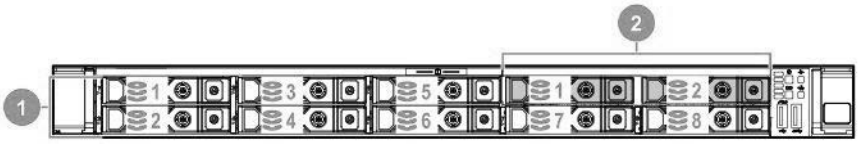

Item	Description
1	Box 1, bays 1-8
2	Box 2, bays 1 and 2

4 LFF device bay numbering

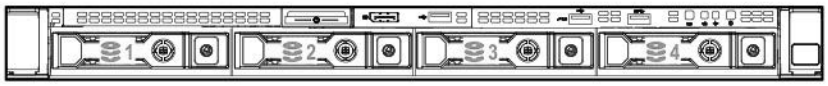

10 SFF NVMe/SAS backplane option device bay numbering

When the 10 SFF NVMe/SAS backplane option is installed, NVMe drives must be installed in bays 9 and 10. The other bays support a mix of NVMe and SAS drives.

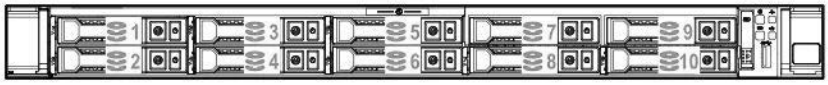

Optional rear device bay numbering

The optional rear device bay supports either 1 SFF drive in a SmartDrive carrier, or 2 uFF M.2 drives in an Smart Carrier M.2 (SCM).

When the SFF Flash Adapter is installed, the uFF drives are recognized as 1 and 101.

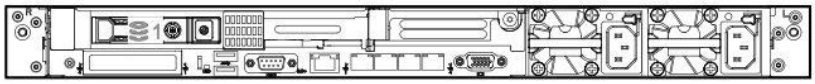

Hot-plug drive LED definitions

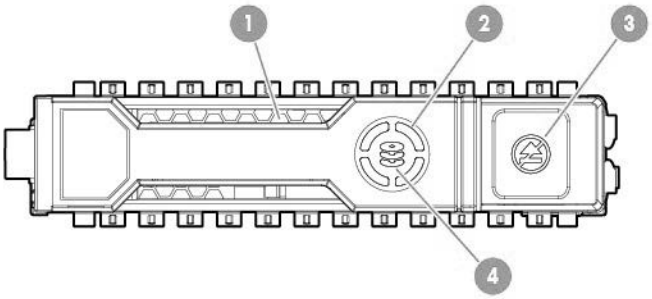

Item	LED	Status	Definition
1	Locate	Solid blue	The drive is being identified by a host application.
		Flashing blue	The drive carrier firmware is being updated or requires an update.
2	Activity ring	Rotating green	Drive activity.
		Off	No drive activity.
3	Do not remove	Solid white	Do not remove the drive. Removing the drive causes one or more of the logical drives to fail.
		Off	Removing the drive does not cause a logical drive to fail.
4	Drive status	Solid green	The drive is a member of one or more logical drives.
		Flashing green	The drive is doing one of the following: • Rebuilding • Performing a RAID migration • Performing a strip size migration • Performing a capacity expansion • Performing a logical drive extension • Erasing • Spare part activation
		Flashing amber/ green	The drive is a member of one or more logical drives and predicts the drive will fail.
		Flashing amber	The drive is not configured and predicts the drive will fail.
		Solid amber	The drive has failed.
		Off	The drive is not configured by a RAID controller or a spare drive.

NVMe SSD LED definitions

The NVMe SSD is a PCIe bus device. A device attached to a PCIe bus cannot be removed without allowing the device and bus to complete and cease the signal/traffic flow.

CAUTION: Do not remove an NVMe SSD from the drive bay while the Do not remove LED is flashing. The Do not remove LED flashes to indicate that the device is still in use. Removing the NVMe SSD before the device has completed and ceased signal/traffic flow can cause loss of data.

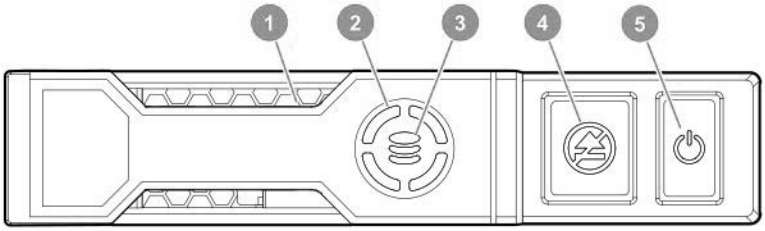

The drive is a member of one or more logical drives and predicts the drive will fail.

Item	LED	Status	Definition
1	Locate	Solid blue	The drive is being identified by a host application.
		Flashing blue	The drive carrier firmware is being updated or requires an update.
2	Activity ring	Rotating green	Drive activity
		Off	No drive activity
3	Drive status	Solid green	The drive is a member of one or more logical drives.
		Flashing green	The drive is doing one of the following: • Rebuilding • Performing a RAID migration • Performing a stripe size migration • Performing a capacity expansion • Performing a logical drive extension • Erasing
		Flashing amber/ green	The drive is a member of one or more logical drives and predicts the drive will fail.
		Flashing amber	The drive is not configured and predicts the drive will
		fail. Solid amber	The drive has failed.
		Off	The drive is not configured by a RAID controller.
4	Do not remove	Solid white	Do not remove the drive. The drive must be ejected from the PCIe bus prior to removal.

Table Continued

Item	LED	Status	Definition
		Flashing white	The drive ejection request is pending.
		Off	The drive has been ejected.
5	Power	Solid green	Do not remove the drive. The drive must be ejected from the PCIe bus prior to removal.
		Flashing green	The drive ejection request is pending.
		Off	The drive has been ejected.

uFF drive components and LEDs

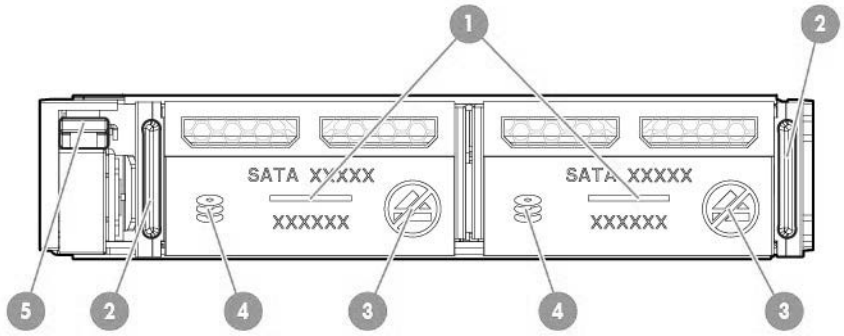

Item	Description	Status
1	Locate	• Off—Normal • Solid blue—The drive is being identified by a host application • Flashing blue—The drive firmware is being updated or requires an update
2	uFF drive ejection latch	Removes the uFF drive when released
3	Do not remove LED	• Off—OK to remove the drive. Removing the drive does cause a logical drive to fail. • Solid white—Do not remove the drive. Removing the drive causes one or more of the logical drives to fail.

Table Continued

Item	Description	Status
4	Drive status LED	• Off—The drive is not configured by a RAID controller • Solid green—The drive is a member of one or more logical drives • Flashing green (4 Hz)—The drive is operating normally and has activity • Flashing green (1 Hz)—The drive is rebuilding or performing a RAID migration, stripe size migration, capacity expansion, logical drive extension, or is erasing • Flashing amber/green (1 Hz)—The drive is a member of one or more logical drives that predicts the drive will fail • Solid amber—The drive has failed • Flashing amber (1 Hz)—The drive is not configured and predicts the drive will fail
4	Adapter ejection release latch and handle	Removes the SFF flash adapter when released

Hot-plug fans

CAUTION: To avoid damage to server components, fan blanks must be installed in fan bays 1 and 2 in a single-processor configuration.

CAUTION: To avoid damage to the equipment, do not operate the server for extended periods of time if the server does not have the optimal number of fans installed. Although the server might boot, Hitachi Vantara does not recommend operating the server without the required fans installed and operating.

The valid fan configurations are listed in the following tables.

One-processor configuration

Fan bay 1	Fan bay 2	Fan bay 3	Fan bay 4	Fan bay 5	Fan bay 6	Fan bay 7
Fan blank	Fan blank	Fan	Fan	Fan	Fan	Fan

Two-processor configuration

Fan bay 1	Fan bay 2	Fan bay 3	Fan bay 4	Fan bay 5	Fan bay 6	Fan bay 7
Fan	Fan	Fan	Fan	Fan	Fan	Fan

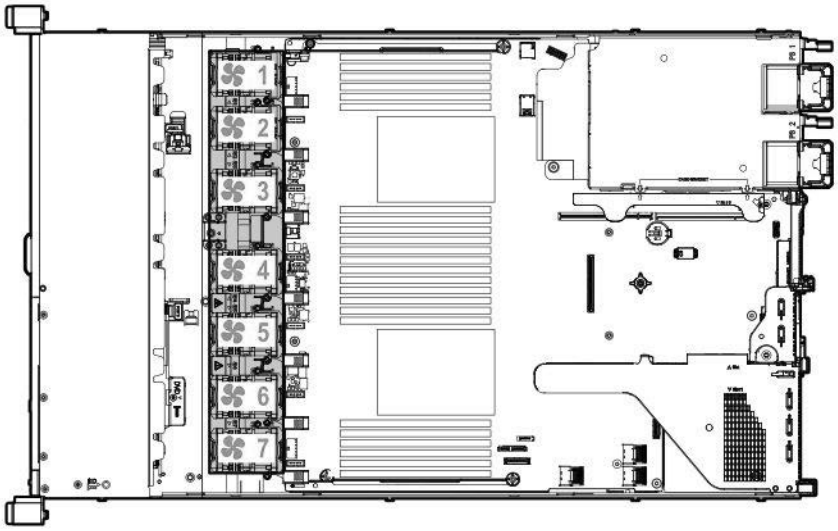

The loss of a single fan rotor (one standard fan) causes loss of redundancy. The loss of two fan rotors (two standard fans or one high-performance fan) causes the server to initiate a shutdown.

The high-performance fans are used for 8 SFF +2 SFF NVMe and 10 SFF drive configurations when NVMe drives are installed in the server. They are also required for ASHRAE compliant configurations. For more information, contact customer support.

The server supports variable fan speeds. The fans operate at minimum speed until a temperature change requires a fan speed increase to cool the server. The server shuts down during the following temperature-related scenarios:

- At POST and in the OS, iLO performs an orderly shutdown if a cautionary temperature level is detected. If the server hardware detects a critical temperature level before an orderly shutdown occurs, the server performs an immediate shutdown.
- When the Thermal Shutdown feature is disabled in the BIOS/Platform Configuration (RBSU), iLO does not perform an orderly shutdown when a cautionary temperature level is detected. Disabling this feature does not disable the server hardware from performing an immediate shutdown when a critical temperature level is detected.

CAUTION: A thermal event can damage server components when the Thermal Shutdown feature is disabled in the BIOS/Platform Configuration (RBSU).

Smart array P824i-p MR Controller

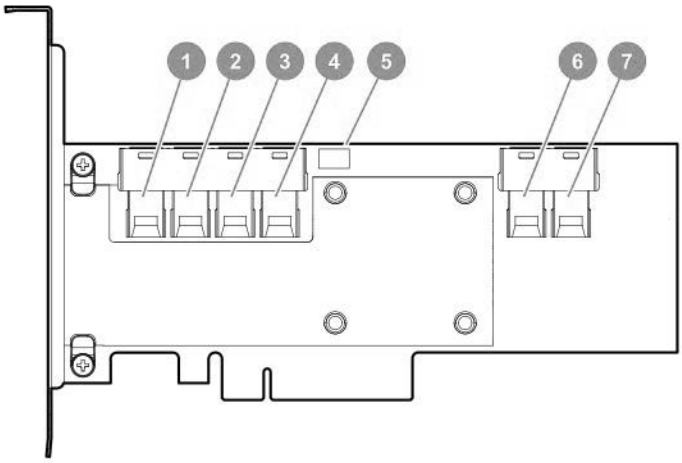

Components

Item	Description
1	Internal SAS port 1i
2	Internal SAS port 2i
3	Internal SAS port 3i
4	Internal SAS port 4i
5	Controller backup power cable connector
6	Internal SAS port 5i
7	Internal SAS port 6i

Infiniband HDR/Ethernet 940QSFP 56x16 adapter LEDs

Link LED status[1]	Description
Off	A link has not been established.
Solid amber	Active physical link exists
Blinking amber	4 Hz blinking amber indicates a problem with the physical link.
Solid green	A valid logical (data activity) link exists with no active traffic.
Blinking green	A valid logical link exists with active traffic.

[1] 2-port adapter LEDs are shown. The 1-port adapters have only a single LED.

DSC-25 2-port SFP28 card ports and LEDs

Ports

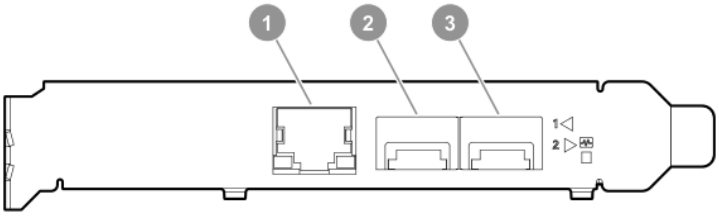

Table 1: Ports

Item	Port	Description
1	Management port	1GbE RJ45
2	Network interface port	10/25G SFP+ based
3	Network interface port	10/25G SFP+ based

LEDs

The DSP DSC-25 2p SFP28 Card is a dual-port, single-slot, half-height, half-length (HHHL) SFP28 network adapter. It has LEDs for Link (L) and Activity (A) for each port. A half-height bracket is shown in the following illustration with SFP28 ports and LEDs.

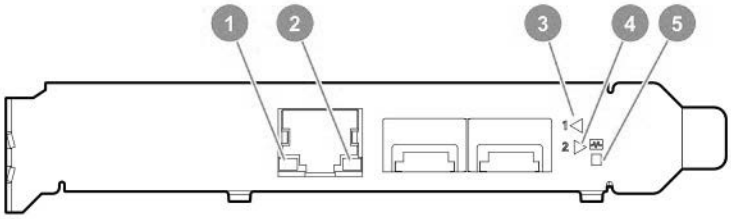

Table 2: LED indicators

Item	LED	Status	Description
1	Management Port Activity LED	Off	No activity
		Flashing	Passing traffic; flashing frequency indicates traffic intensity
2	Management Port Link LED	Off	A link has not been established
		Solid green	Valid Ethernet link
3	SFP Port 1 Link/Activity LED	Off	A link has not been established
		Solid green	Valid Ethernet link
		Flashing green	Passing traffic; flashing frequency indicates traffic
		intensity Solid amber	Link fault
4	SFP Port 2 Link/Activity LED	Off	A link has not been established
		Solid green	Valid Ethernet link

Table Continued

Item	LED	Status	Description
		Flashing green	Passing traffic; flashing frequency indicates traffic
		Solid amber	Link fault
5	System status LED	Off	System is not powered
		Solid amber	Power is up, software has not booted yet
		Solid green	System is up and fully operational

Operations

Power up the server

To power up the server, use one of the following methods:

- Press the Power On/Standby button.
- Use the virtual power button through iLO.

Power down the server

Before powering down the server for any upgrade or maintenance procedures, perform a backup of critical server data and programs.

IMPORTANT: When the server is in standby mode, auxiliary power is still being provided to the system.

To power down the server, use one of the following methods:

- Press and release the Power On/Standby button.

  This method initiates a controlled shutdown of applications and the OS before the server enters standby mode.
- Press and hold the Power On/Standby button for more than 4 seconds to force the server to enter standby mode.

  This method forces the server to enter standby mode without properly exiting applications and the OS. If an application stops responding, you can use this method to force a shutdown.
- Use a virtual power button selection through iLO.

  This method initiates a controlled remote shutdown of applications and the OS before the server enters standby mode.

Before proceeding, verify that the server is in standby mode by observing that the system power LED is amber.

Extend the server from the rack

NOTE: If the cable management arm option is installed, you can extend the server without powering down the server or disconnecting peripheral cables and power cords. These steps are only necessary with the standard cable management solution.

Procedure

1. Power down the server (**Power down the server**).
2. Disconnect all peripheral cables and power cords.
3. Loosen the front panel thumbscrews.
4. Extend the server on the rack rails until the server rail-release latches engage.

   WARNING: To reduce the risk of personal injury or equipment damage, be sure that the rack is adequately stabilized before extending a component from the rack.

WARNING: To reduce the risk of personal injury, be careful when pressing the server rail-release latches and sliding the server into the rack. The sliding rails could pinch your fingers.

5. After performing the installation or maintenance procedure, slide the server into the rack:
   a. Slide the server fully into the rack.
   b. Secure the server by tightening the thumbscrews.
6. Connect the peripheral cables and power cords.

Remove the server from the rack

To remove the server from a rack:

Procedure

1. Power down the server (**Power down the server**).
2. Extend the server from the rack (**Extend the server from the rack**).
3. Disconnect the cabling and remove the server from the rack. For more information, see the documentation that ships with the rack mounting option.
4. Place the server on a sturdy, level surface.

Remove the access panel

WARNING: To reduce the risk of personal injury from hot surfaces, allow the drives and the internal system components to cool before touching them.

CAUTION: Do not operate the server for long periods with the access panel open or removed. Operating the server in this manner results in improper airflow and improper cooling that can lead to thermal damage.

To remove the component:

Procedure

1. Power down the server (**Power down the server**).
2. Extend the server from the rack (**Extend the server from the rack**).
3. Open or unlock the locking latch, slide the access panel to the rear of the chassis, and remove the access panel.

Install the access Panel

Procedure

1. Place the access panel on top of the server with the latch open.
   Allow the panel to extend past the rear of the server approximately 1.25 cm (0.5 in).
2. Push down on the latch.

The access panel slides to a closed position.

3. Tighten the security screw on the latch, if needed.

Remove the hot-plug fan

Procedure

1. Observe the following alert:

   IMPORTANT: After removing a high-performance (dual-rotor) fan, install or replace the fan within 60 seconds. Otherwise, the server will shut down gracefully.

2. Do one of the following:

   a. Extend the server from the rack (**Extend the server from the rack**).

   b. Remove the server from the rack (**Remove the server from the rack**).

3. Remove the access panel (**Remove the access panel**).

4. Remove the fan.

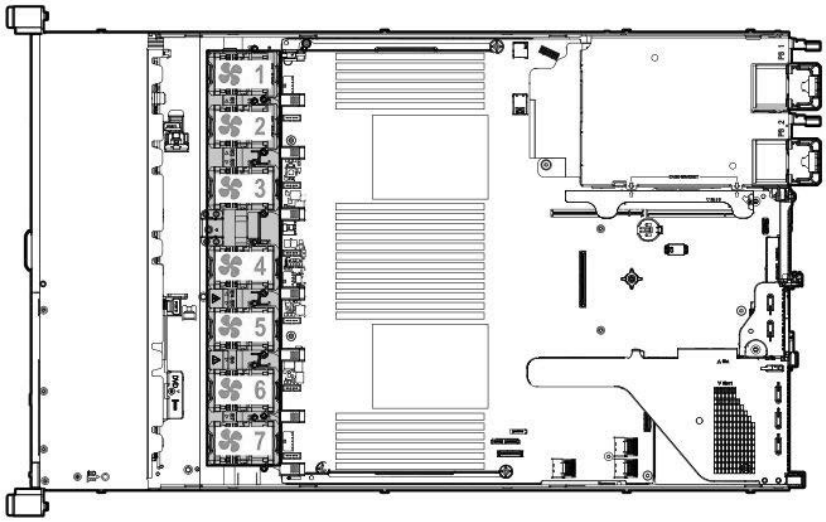

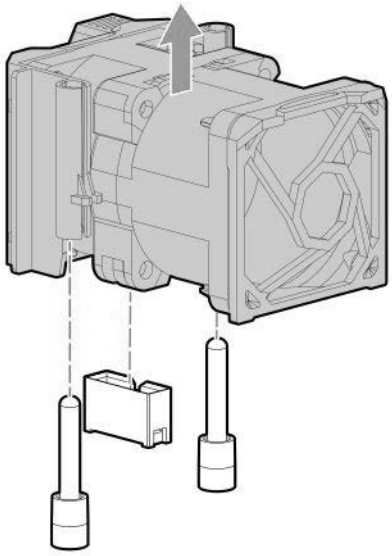

CAUTION: Do not operate the server for long periods with the access panel open or removed. Operating the server in this manner results in improper airflow and improper cooling that can lead to thermal damage.

IMPORTANT: For optimum cooling, install fans in all primary fan locations.

To replace the component, reverse the removal procedure.

Remove the primary PCI riser cage

CAUTION: To prevent damage to the server or expansion boards, power down the server and remove all AC power cords before removing or installing the PCI riser cage.

Procedure

1. Back up all server data.
2. Power down the server (**Power down the server**).
3. Remove all power:
   a. Disconnect each power cord from the power source.
   b. Disconnect each power cord from the server.
4. Do one of the following:
   a. Extend the server from the rack (**Extend the server from the rack**).
   b. Remove the server from the rack (**Remove the server from the rack**).
5. Remove the access panel (**Remove the access panel**).
6. Remove the PCI riser cage.

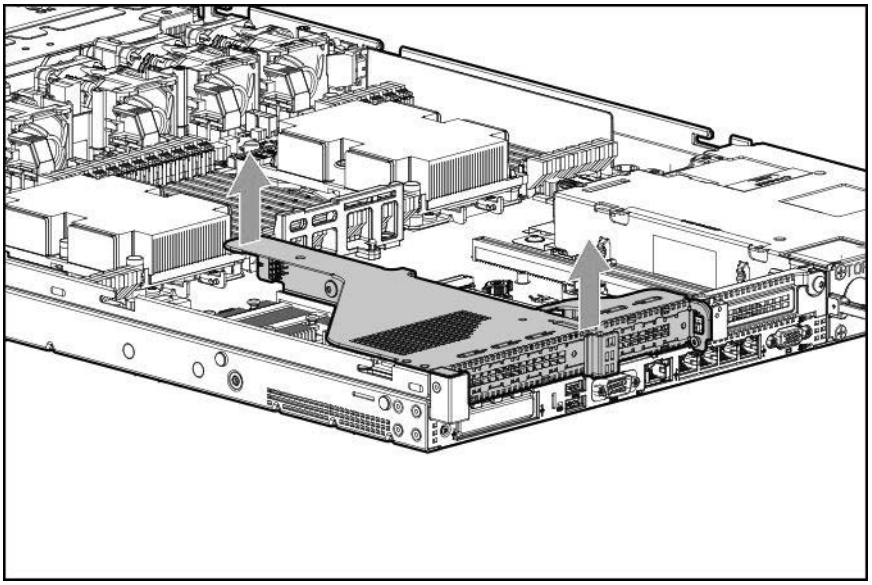

Install the primary PCI riser cage

Procedure

1. Install the PCI riser cage.

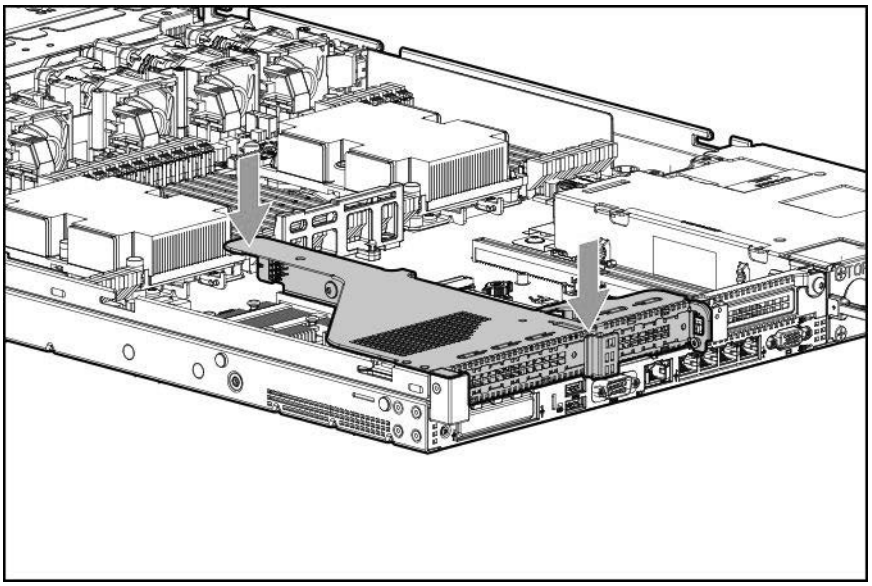

2. Install the access panel (**Install the access panel**).
3. Install the server into the rack (**Installing the server into the rack**).
4. Connect each power cord to the server.
5. Connect each power cord to the power source.
6. Power up the server (**Power up the server**).

Remove the secondary PCI riser cage

Procedure

1. Observe the following alert:

   CAUTION: To prevent damage to the server or expansion boards, power down the server and remove all AC power cords before removing or installing the PCI riser cage.

2. Back up all server data.
3. Power down the server (**Power down the server**).
4. Remove all power:
   a. Disconnect each power cord from the power source.
   b. Disconnect each power cord from the server.
5. Do one of the following:
   a. Extend the server from the rack (**Extend the server from the rack**).
   b. Remove the server from the rack (**Remove the server from the rack**).
6. Remove the access panel (**Remove the access panel**).
7. If needed, remove the primary PCI riser cage (**Remove the primary PCI riser cage**).
8. Disconnect any cables connected to the PCI riser cage.
9. Remove any expansion boards installed in the PCI riser cage.

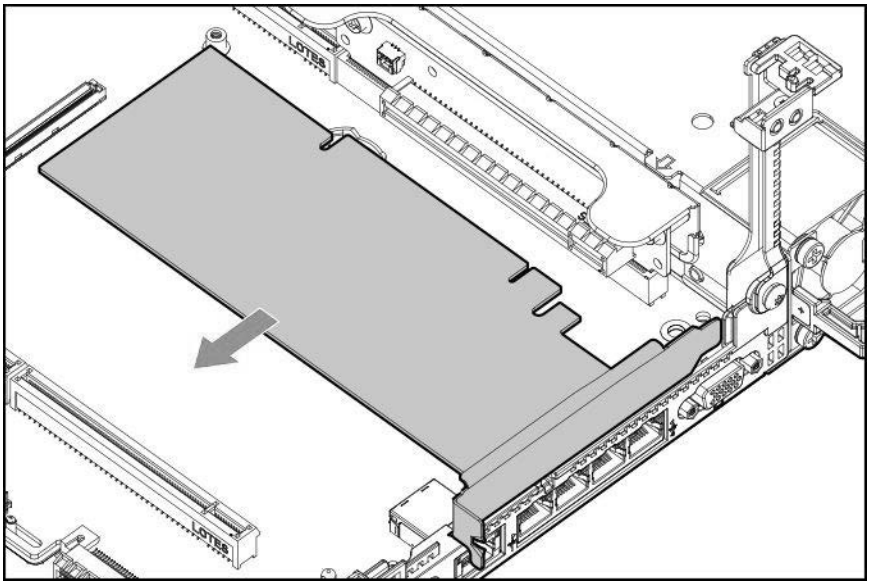

10. Remove the PCI riser cage.

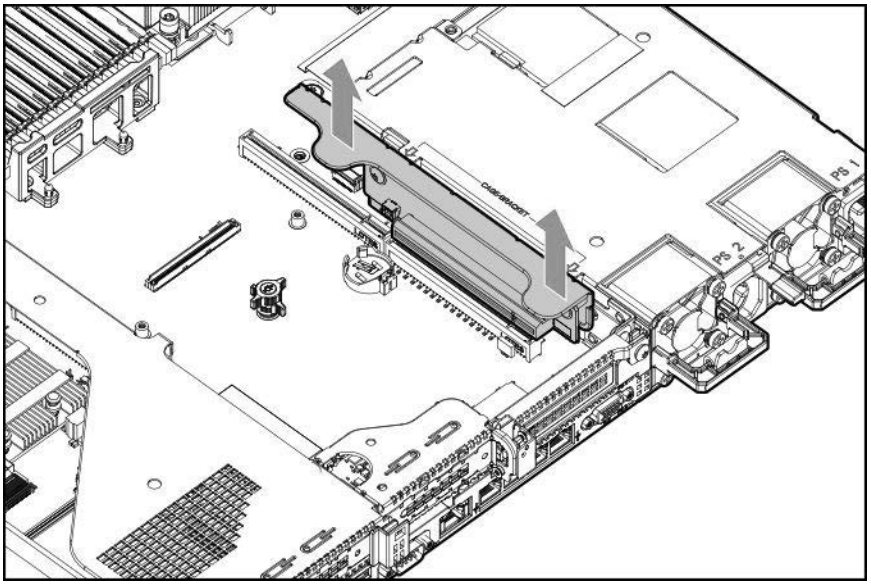

Install the secondary PCI riser cage

Procedure

1. Install the PCI riser cage.

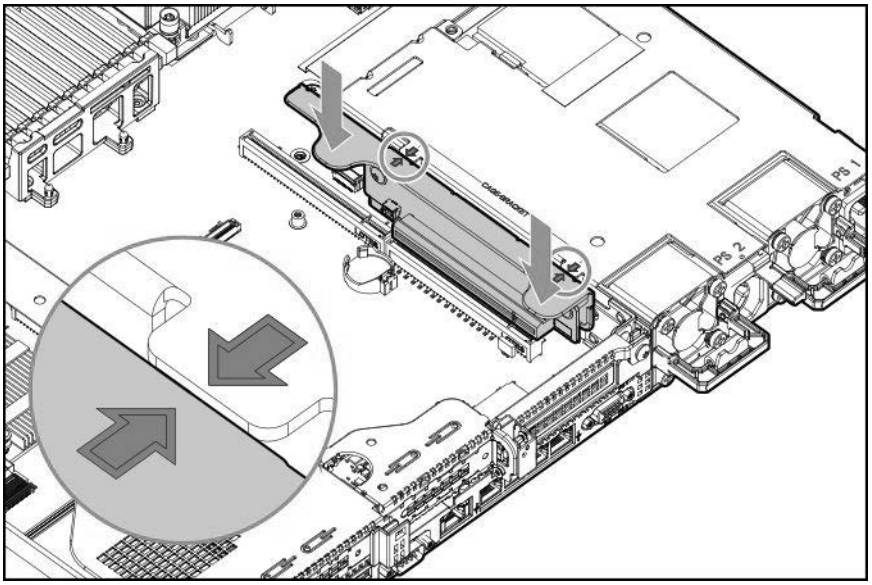

2. If needed, install expansion boards (**Installing an expansion board in the secondary riser cage**).
3. Install the access panel (**Install the access panel**).
4. Install the server into the rack (**Installing the server into the rack**).
5. Connect each power cord to the server.
6. Connect each power cord to the power source.
7. Power up the server (**Power up the server**).

Remove the 8 SFF drive backplane

Procedure

1. Back up all server data.
2. Power down the server (**Power down the server**).
3. Remove all power:
   a. Disconnect each power cord from the power source.
   b. Disconnect each power cord from the server.
4. Do one of the following:
   a. Extend the server from the rack (**Extend the server from the rack**).
   b. Remove the server from the rack (**Remove the server from the rack**
   c.).
5. Remove the access panel (**Remove the access panel**).
6. Remove all drives (**Removing a hot-plug SAS or SATA hard drive**).
7. Disconnect and remove all cables connected to the drive backplane.
8. Remove the 8 SFF SAS/SATA drive backplane.

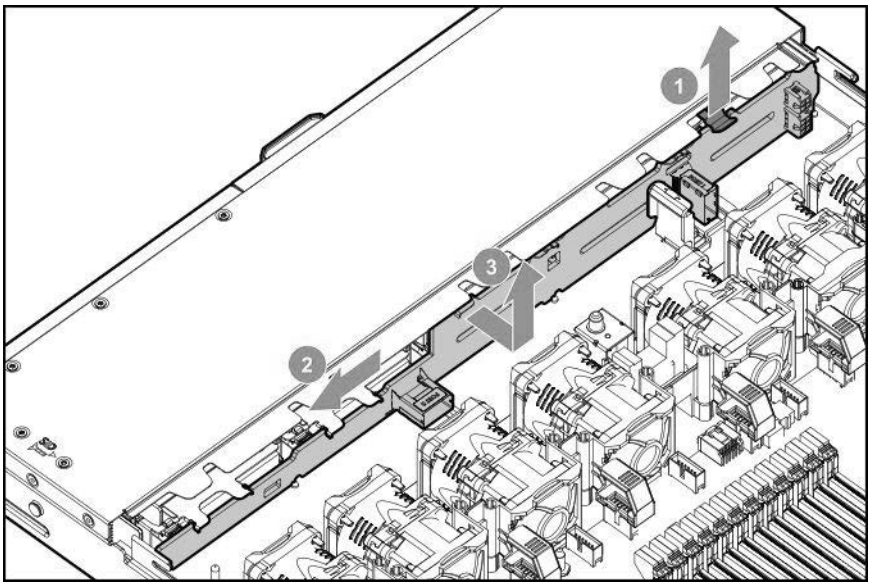

Release the cable management arm

Release the cable management arm and then swing the arm away from the rack.

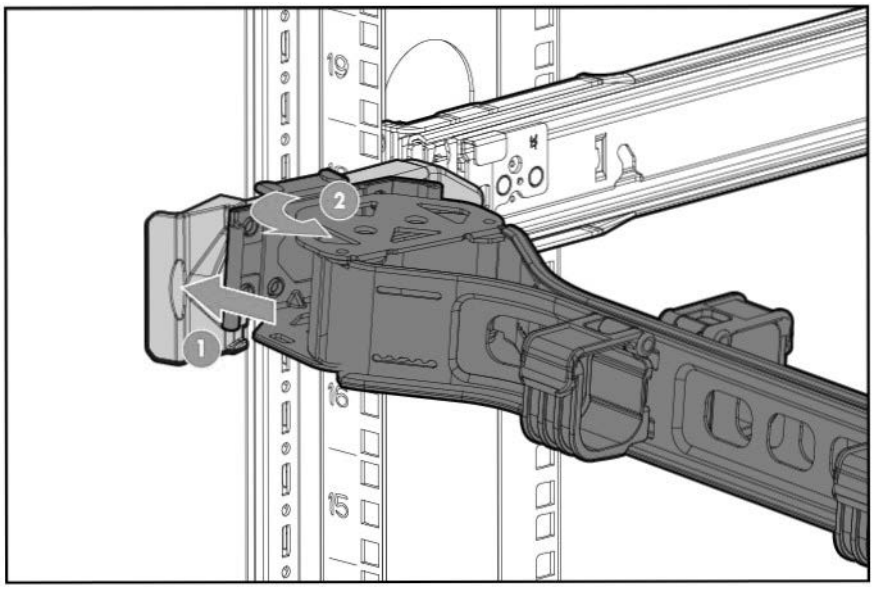
19
16
15
2
1

Setup

Optimum environment

When installing the server in a rack, select a location that meets the environmental standards described in this section.

Space and airflow requirements

To allow for servicing and adequate airflow, observe the following space and airflow requirements when deciding where to install a rack:

- Leave a minimum clearance of 63.5 cm (25 in) in front of the rack.
- Leave a minimum clearance of 76.2 cm (30 in) behind the rack.
- Leave a minimum clearance of 121.9 cm (48 in) from the back of the rack to the back of another rack or row of racks.

Hitachi Advanced Server products draw in cool air through the front door and expel warm air through the rear door. Therefore, the front and rear rack doors must be adequately ventilated to allow ambient room air to enter the cabinet, and the rear door must be adequately ventilated to allow the warm air to escape from the cabinet.

CAUTION: To prevent improper cooling and damage to the equipment, do not block the ventilation openings.

When vertical space in the rack is not filled by a server or rack component, the gaps between the components cause changes in airflow through the rack and across the servers. Cover all gaps with blanking panels to maintain proper airflow.

CAUTION: Always use blanking panels to fill empty vertical spaces in the rack. This arrangement ensures proper airflow. Using a rack without blanking panels results in improper cooling that can lead to thermal damage.

The 9000 and 10000 Series Racks provide proper server cooling from flow-through perforations in the front and rear doors that provide 64 percent open area for ventilation.

CAUTION: When using a Compaq branded 7000 series rack, install the high airflow rack door insert (PN 327281- B21 for 42U rack, PN 157847-B21 for 22U rack) to provide proper front-to-back airflow and cooling.

CAUTION: If a third-party rack is used, observe the following additional requirements to ensure adequate airflow and to prevent damage to the equipment:

- Front and rear doors—If the 42U rack includes closing front and rear doors, you must allow 5,350 sq cm (830 sq in) of holes evenly distributed from top to bottom to permit adequate airflow (equivalent to the required 64 percent open area for ventilation).
- Side—The clearance between the installed rack component and the side panels of the rack must be a minimum of 7 cm (2.75 in).

Temperature requirements

To ensure continued safe and reliable equipment operation, install or position the system in a well-ventilated, climate- controlled environment.

The maximum recommended ambient operating temperature (TMRA) for most server products is 35°C (95°F). The temperature in the room where the rack is located must not exceed 35°C (95°F).

CAUTION: To reduce the risk of damage to the equipment when installing third-party options:

- Do not permit optional equipment to impede airflow around the server or to increase the internal rack temperature beyond the maximum allowable limits.
- Do not exceed the manufacturer's TMRA.

Power requirements

Installation of this equipment must comply with local and regional electrical regulations governing the installation of information technology equipment by licensed electricians. This equipment is designed to operate in installations covered by NFPA 70, 1999 Edition (National Electric Code) and NFPA-75, 1992 (code for Protection of Electronic Computer/Data Processing Equipment). For electrical power ratings on options, refer to the product rating label or the user documentation supplied with that option.

WARNING: To reduce the risk of personal injury, fire, or damage to the equipment, do not overload the AC supply branch circuit that provides power to the rack. Consult the electrical authority having jurisdiction over wiring and installation requirements of your facility.

CAUTION: Protect the server from power fluctuations and temporary interruptions with a regulating uninterruptible power supply. This device protects the hardware from damage caused by power surges and voltage spikes and keeps the system in operation during a power failure.

Electrical grounding requirements

The server must be grounded properly for proper operation and safety. In the United States, you must install the equipment in accordance with NFPA 70, 1999 Edition (National Electric Code), Article 250, as well as any local and regional building codes. In Canada, you must install the equipment in accordance with Canadian Standards Association, CSA C22.1, Canadian Electrical Code. In all other countries, you must install the equipment in accordance with any regional or national electrical wiring codes, such as the International Electrotechnical Commission (IEC) Code 364, parts 1 through 7. Furthermore, you must be sure that all power distribution devices used in the installation, such as branch wiring and receptacles, are listed or certified grounding-type devices.

Because of the high ground-leakage currents associated with multiple servers connected to the same power source, Hitachi Vantara recommends the use of a PDU that is either permanently wired to the building's branch circuit or includes a nondetachable cord that is wired to an industrial-style plug. NEMA locking-style plugs or those complying with IEC 60309 are considered suitable for this purpose. Using common power outlet strips for the server is not recommended.

Connecting a DC power cable to a DC power source

WARNING: To reduce the risk of electric shock or energy hazards:

- This equipment must be installed by trained service personnel, as defined by the NEC and IEC 60950-1, Second Edition, the standard for Safety of Information Technology Equipment.
- Connect the equipment to a reliably grounded Secondary circuit source. A Secondary circuit has no direct connection to a Primary circuit and derives its power from a transformer, converter, or equivalent isolation device.
- The branch circuit overcurrent protection must be rated 27 A.

WARNING: When installing a DC power supply, the ground wire must be connected before the positive or negative leads.

WARNING: Remove power from the power supply before performing any installation steps or maintenance on the power supply.

CAUTION: The server equipment connects the earthed conductor of the DC supply circuit to the earthing conductor at the equipment. For more information, see the documentation that ships with the power supply.

CAUTION: If the DC connection exists between the earthed conductor of the DC supply circuit and the earthing conductor at the server equipment, the following conditions must be met:

- This equipment must be connected directly to the DC supply system earthing electrode conductor or to a bonding jumper from an earthing terminal bar or bus to which the DC supply system earthing electrode conductor is connected.
- This equipment should be located in the same immediate area (such as adjacent cabinets) as any other equipment that has a connection between the earthed conductor of the same DC supply circuit and the earthing conductor, and also the point of earthing of the DC system. The DC system should be earthed elsewhere.
- The DC supply source is to be located within the same premises as the equipment.
- Switching or disconnecting devices should not be in the earthed circuit conductor between the DC source and the point of connection of the earthing electrode conductor.

To connect a DC power cable to a DC power source:

1. Cut the DC power cord ends no shorter than 150 cm (59.06 in).
2. If the power source requires ring tongues, use a crimping tool to install the ring tongues on the power cord wires.

   IMPORTANT: The ring terminals must be UL approved and accommodate 12-gauge wires.

   IMPORTANT: The minimum nominal thread diameter of a pillar or stud type terminal must be 3.5 mm (0.138 in); the diameter of a screw type terminal must be 4.0 mm (0.157 in).

3. Stack each same-colored pair of wires and then attach them to the same power source. The power cord consists of three wires (black, red, and green).

For more information, see the documentation that ships with the power supply.

Server warnings and cautions

WARNING: This server is heavy. To reduce the risk of personal injury or damage to the equipment:

- Observe local occupational health and safety requirements and guidelines for manual material handling.
- Get help to lift and stabilize the product during installation or removal, especially when the product is not fastened to the rails. Hitachi Vantara recommends that a minimum of two people are required for all rack server installations. If the server is installed higher than chest level, a third person may be required to help align the server.
- Use caution when installing the server in or removing the server from the rack; it is unstable when not fastened to the rails.

WARNING: To reduce the risk of personal injury from hot surfaces, allow the drives and the internal system components to cool before touching them.

WARNING: To reduce the risk of personal injury, electric shock, or damage to the equipment, remove the power cord to remove power from the server. The front panel Power On/Standby button does not completely shut off system power. Portions of the power supply and some internal circuitries remain active until AC/DC power is removed.

WARNING: To reduce the risk of fire or burns after removing the energy pack:

- Do not disassemble, crush, or puncture the energy pack.
- Do not short external contacts.
- Do not dispose of the energy pack in fire or water.

After power is disconnected, battery voltage might still be present for 1s to 160s.

CAUTION: Protect the server from power fluctuations and temporary interruptions with a regulating uninterruptible power supply. This device protects the hardware from damage caused by power surges and voltage spikes and keeps the system in operation during a power failure.

CAUTION: Do not operate the server for long periods with the access panel open or removed. Operating the server in this manner results in improper airflow and improper cooling that can lead to thermal damage.

Rack warnings

WARNING: To reduce the risk of personal injury or damage to the equipment, be sure that:

- The leveling jacks are extended to the floor.
- The full weight of the rack rests on the leveling jacks.
- The stabilizing feet are attached to the rack if it is a single-rack installation.
- The racks are coupled together in multiple-rack installations.
- Only one component is extended at a time. A rack may become unstable if more than one component is extended for any reason.

WARNING: To reduce the risk of personal injury or equipment damage when unloading a rack:

- At least two people are needed to safely unload the rack from the pallet. An empty 42U rack can weigh as much as 115 kg (253 lb), can stand more than 2.1 m (7 ft) tall, and might become unstable when being moved on its casters.
- Never stand in front of the rack when it is rolling down the ramp from the pallet. Always handle the rack from both sides.

WARNING: To reduce the risk of personal injury or damage to the equipment, adequately stabilize the rack before extending a component outside the rack. Extend only one component at a time. A rack may become unstable if more than one component is extended.

WARNING: When installing a server in a telco rack, be sure that the rack frame is adequately secured at the top and bottom to the building structure.

Identifying the contents of the server shipping carton

Unpack the server shipping carton and locate the materials and documentation necessary for installing the server. All the rack mounting hardware necessary for installing the server into the rack is included with the rack or the server.

The contents of the server shipping carton include:

- Server
- Power cord
- Hardware documentation and software products
- Rack-mounting hardware and documentation

  In addition to the supplied items, you might need:
  - Operating system or application software
  - Hardware options
  - Screwdriver

Installing hardware options

Install any hardware options before initializing the server. For options installation information, refer to the option documentation. For server-specific information, refer to "**Hardware options installation**."

Installing the server into the rack

To install the server into a rack with square, round, or threaded holes, refer to the instructions that ship with the rack hardware kit.

WARNING: This server is heavy. To reduce the risk of personal injury or damage to the equipment:

- Observe local occupational health and safety requirements and guidelines for manual material handling.
- Get help to lift and stabilize the product during installation or removal, especially when the product is not fastened to the rails. Hitachi Vantara recommends that a minimum of two people are required for all rack server installations. A third person may be required to help align the server if the server is installed higher than chest level.
- Use caution when installing the server in or removing the server from the rack; it is unstable when not fastened to the rails.

CAUTION: Always plan the rack installation so that the heaviest item is on the bottom of the rack. Install the heaviest item first and continue to populate the rack from the bottom to the top.

Procedure

1. Install the server and cable management arm into the rack. For more information, see the installation instructions that ship with the selected rail system.
2. Connect peripheral devices to the server. For more information, see **Rear panel components**.
3. Connect the power cord to the rear of the server.
4. Use the hook-and-loop strap to secure the power cord.
5. Connect the power cord to the power source.

Operating system

This Advanced Server product does not ship with provisioning media. Everything required to manage and install the system software and firmware is preloaded on the server.

To operate properly, the server must have a supported operating system. Attempting to run an unsupported operating system can cause serious and unpredictable results. For the latest information about supported operating systems, see **https://support.hitachivantara.com/en/user/answers/interoperability.html**.

Failure to observe UEFI requirements for HA800 servers can result in errors installing the operating system, failure to recognize boot media, and other boot failures. For more information on these requirements, read the UEFI requirements for Advanced Server products on **https://knowledge.hitachivantara.com/Documents/Servers**.

To install an operating system on the server, use one of the following methods:

- Intelligent Provisioning—For single-server deployment, updating, and provisioning capabilities. For more information, see **Installing the operating system with Intelligent Provisioning**.
- Insight Control server provisioning—For multiserver remote OS deployment, use Insight Control server provisioning for an automated solution. For more information, contact customer support.

For additional system software and firmware updates, contact customer support. Software and firmware must be updated before using the server for the first time, unless any installed software or components require an older version.

For more information, see **Keeping the system current**.

For more information on using these installation methods, contact customer support.

Installing the operating system with Intelligent Provisioning

Procedure

1. Connect the Ethernet cable between the network connector on the server and a network jack.
2. Press the Power On/Standby button.
3. During server POST, press **F10**.
4. Complete the initial Preferences and Registration portion of **Intelligent Provisioning**.
5. At the Start screen, click **Configure and Install**.
6. To finish the installation, follow the onscreen prompts. An Internet connection is required to update the firmware and systems software.

Selecting boot options in UEFI Boot Mode

On servers operating in UEFI Boot Mode, the boot controller and boot order are set automatically.

Procedure

1. Press the Power On/Standby button.
2. During the initial boot:
   - To modify the server configuration ROM default settings, press the **F9** key in the Advanced Server POST screen to enter the UEFI System Utilities screen. By default, the System Utilities menus are in the English language.
   - If you do not need to modify the server configuration and are ready to install the system software, press the **F10**
     key to access Intelligent Provisioning.

For more information on automatic configuration, see the UEFI documentation on the **https://knowledge.hitachivantara.com/Documents/Servers**.

Selecting boot options

This server supports both Legacy BIOS Boot Mode and UEFI Boot Mode. On servers operating in UEFI Boot Mode, the boot controller and boot order are set automatically.

Procedure

1. Press the Power On/Standby button.
2. Do one of the following:
   - To enter the UEFI System Utilities screen and modify the server configuration ROM default settings, press the **F9**
     key on the Advanced Server POST screen. Choose one of the following boot modes:
     - Legacy BIOS
     - UEFI (default)
   - If you do not need to modify the server configuration and are ready to install the system software, press the **F10**
     key to access Intelligent Provisioning.

For more information on automatic configuration, see the UEFI documentation on the **https://knowledge.hitachivantara.com/Documents/Servers**.

Registering the server

Register the product at **https://support.hitachivantara.com/en/user/home.html**.

Hardware options installation

Introduction

Install any hardware options before initializing the server. If multiple options are being installed, read the installation instructions for all the hardware options to identify similar steps and streamline the installation process.

WARNING: To reduce the risk of personal injury from hot surfaces, allow the drives and the internal system components to cool before touching them.

CAUTION: To prevent damage to electrical components, properly ground the server before beginning any installation procedure. Improper grounding can cause electrostatic discharge.

Installing a redundant hot-plug power supply

Prerequisites

Before installing this option, be sure you have the

following: The components included with the hardware

option kit

Procedure

1. Observe the following alerts:

   CAUTION: All power supplies installed in the server must have the same output power capacity. Verify that all power supplies have the same part number and label color. The system becomes unstable and may shut down when it detects mismatched power supplies.

   CAUTION: To prevent improper cooling and thermal damage, do not operate the server unless all bays are populated with either a component or a blank.

2. Access the product rear panel (**Release the cable management arm**).
3. Remove the blank.

   WARNING: To reduce the risk of personal injury from hot surfaces, allow the power supply or power supply blank to cool before touching it.

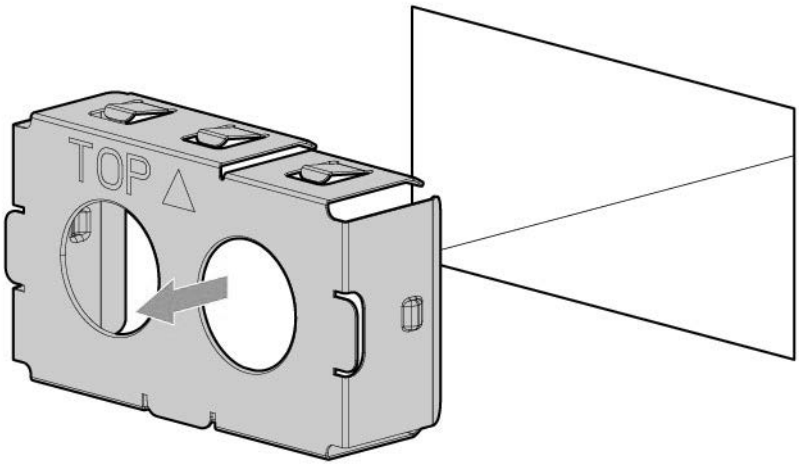

4. Insert the power supply into the power supply bay until it clicks into place.

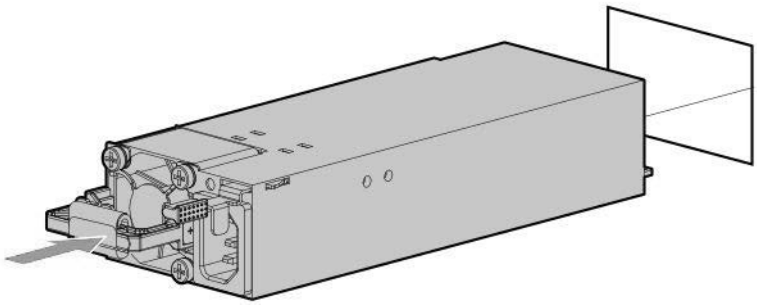

5. Connect the power cord to the power supply.
6. Route the power cord. Use best practices when routing power cords and other cables. A cable management arm is available to help with routing. To obtain a cable management arm, contact a Hitachi Vantara authorized reseller.
7. Connect the power cord to the AC power source.
8. Be sure that the power supply LED is green (**Rear panel LEDs**).

Memory options

IMPORTANT: This server does not support mixing LRDIMMs and RDIMMs. Attempting to mix any combination of these DIMMs can cause the server to halt during BIOS initialization. All memory installed in the server must be of the same type.

DIMM-processor compatibility

The installed processor determines the type of DIMM that is supported in the server:

- First-generation Intel Xeon Scalable processors support DDR4-2666 DIMMs.
- Second-generation Intel Xeon Scalable processors support DDR4-2933 DIMMs.

Mixing DIMM types is not supported. Install only the supported DDR4-2666 or DDR4-2933 DIMMs in the server.

Installing a DIMM

The server supports up to 24 DIMMs.

Prerequisites

Before installing this option, be sure you have the following: The components included with the hardware option kit

Procedure

1. Power down the server (**Power down the server**).
2. Remove all power:
   a. Disconnect each power cord from the power source.
   b. Disconnect each power cord from the server.
3. Do one of the following:
   a. Extend the server from the rack (**Extend the server from the rack**).
   b. Remove the server from the rack (**Remove the server from the rack**).
4. Remove the access panel (**Remove the access panel**).
5. Open the DIMM slot latches.
6. Install the DIMM.

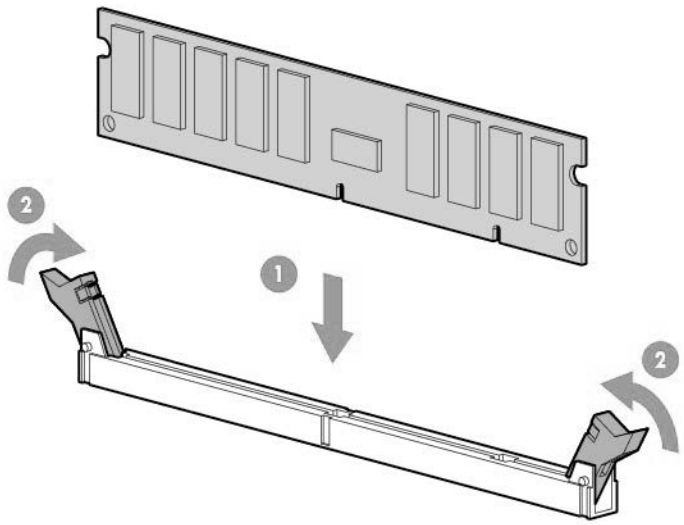

7. Install the access panel (**Install the access panel**).
8. Install the server in the rack.
9. Connect each power cord to the server.
10. Connect each power cord to the power source.
11. Power up the server (**Power up the server**).

Use the BIOS/Platform Configuration (RBSU) in the UEFI System Utilities to configure the memory mode.

For more information about LEDs and troubleshooting failed DIMMs, see **Systems Insight Display combined LED descriptions**.

16GB NVDIMM option

NVDIMMs are flash-backed NVDIMMs used as fast storage and are designed to eliminate smaller storage bottlenecks. The 16GB NVDIMM for HA800 servers is ideal for smaller database storage bottlenecks, write caching tiers, and any workload constrained by storage bottlenecks.

The 16GB NVDIMM is supported on select HA800 servers with first generation Intel Xeon Scalable processors. The server can support up to 12 NVDIMMs in 2 socket servers (up to 192GB) and up to 24 NVDIMMs in 4 socket servers (up to 384GB). The Smart Storage Battery provides backup power to the memory slots allowing data to be moved from the DRAM portion of the NVDIMM to the Flash portion for persistence during a power down event.

For more information on sanitization for NVDIMMs, contact customer support).

NVDIMM-processor compatibility

16GB NVDIMMs are only supported in servers with first-generation Intel Xeon Scalable processors installed.

Server requirements for NVDIMM support

Before installing an 16GB NVDIMM in a server, make sure that the following components and software are available:

- A supported server using Intel Xeon Scalable Processors
- An Smart Storage Battery

- A minimum of one regular DIMM: The system cannot have only NVDIMM-Ns installed.
- For minimum firmware versions, contact customer support.

Installing an NVDIMM

CAUTION: To avoid damage to the hard drives, memory, and other system components, the air baffle, drive blanks, and access panel must be installed when the server is powered up.

CAUTION: To avoid damage to the hard drives, memory, and other system components, be sure to install the correct DIMM baffles for your server model.

CAUTION: DIMMs are keyed for proper alignment. Align notches in the DIMM with the corresponding notches in the DIMM slot before inserting the DIMM. Do not force the DIMM into the slot. When installed properly, not all DIMMs will face in the same direction.

CAUTION: Electrostatic discharge can damage electronic components. Be sure you are properly grounded before beginning this procedure.

CAUTION: Failure to properly handle DIMMs can damage the DIMM components and the system board connector. For more information, see the DIMM handling guidelines in the troubleshooting guide for your product.)

CAUTION: Unlike traditional storage devices, NVDIMMs are fully integrated in with the Advanced Server. Data loss can occur when system components, such as the processor or Smart Storage Battery, fails. Smart Storage battery is a critical component required to perform the backup functionality of NVDIMMs. It is important to act when Smart Storage Battery related failures occur. Always follow best practices for ensuring data protection.

Prerequisites

Before installing an NVDIMM, be sure the server meets the **Server requirements for NVDIMM support**.

Procedure

1. Power down the server (**Power down the server**).
2. Remove all power:
   a. Disconnect each power cord from the power source.
   b. Disconnect each power cord from the server.
3. Do one of the following:
   a. Extend the server from the rack (**Extend the server from the rack**).
   b. Remove the server from the rack (**Remove the server from the rack**).
4. Remove the access panel (**Remove the access panel**).
5. Locate any NVDIMMs already installed in the server.
6. Verify that all LEDs on any installed NVDIMMs are off.
7. Install the NVDIMM.

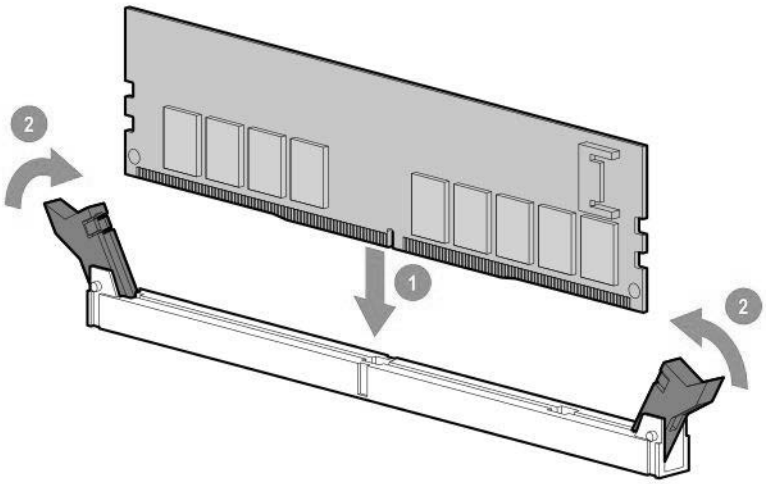

8. Install and connect the Smart Storage Battery, if it is not already installed.
   - **Installing an energy pack in 8 SFF and 4 LFF configurations**
   - **Installing an energy pack in the 10 SFF SAS/SATA/NVMe Combo backplane configuration**
9. Install any components removed to access the DIMM slots and the Smart Storage Battery.
10. Install the access panel.
11. Slide or install the server into the rack.
12. If removed, reconnect all power cables.
13. Power up the server.
14. If required, sanitize the NVDIMM-Ns. For more information, see **NVDIMM sanitization**.

Configuring the server for NVDIMMs

After installing NVDIMMs, configure the server for NVDIMMs. For information on configuring settings for NVDIMMs, contact customer support.

The server can be configured for NVDIMMs using either of the following:

- UEFI System Utilities—Use System Utilities through the Remote Console to configure the server for NVDIMM memory options by pressing the **F9** key during POST. For more information about UEFI System Utilities, see the (**https://knowledge.hitachivantara.com/Documents/Servers**).
- iLO RESTful API for iLO 5—For more information about configuring the system for NVDIMMs contact customer support.

NVDIMM sanitization

Media sanitization is defined by NIST SP800-88 Guidelines for Media Sanitization (Rev 1, Dec 2014) as "a general term referring to the actions taken to render data written on media unrecoverable by both ordinary and extraordinary means."

The specification defines the following levels:

- Clear: Overwrite user-addressable storage space using standard write commands; might not sanitize data in areas not currently user-addressable (such as bad blocks and overprovisioned areas)
- Purge: Overwrite or erase all storage space that might have been used to store data using dedicated device sanitize commands, such that data retrieval is "infeasible using state-of-the-art laboratory techniques"
- Destroy: Ensure that data retrieval is "infeasible using state-of-the-art laboratory techniques" and render the media unable to store data (such as disintegrate, pulverize, melt, incinerate, or shred)

The NVDIMM-N Sanitize options are intended to meet the Purge level.
For more information on sanitization for NVDIMMs, contact customer support.
NIST SP800-88 *Guidelines for Media Sanitization* (Rev 1, Dec 2014) is available for download from the NIST website (**http://nvlpubs.nist.gov/nistpubs/SpecialPublications/NIST.SP.800-88r1.pdf**).

NVDIMM relocation guidelines

Requirements for relocating NVDIMMs or a set of NVDIMMs when the data must be preserved

- The destination server hardware must match the original server hardware configuration.
- All System Utilities settings in the destination server must match the original System Utilities settings in the original server.
- If NVDIMM-Ns are used with NVDIMM Interleaving ON mode in the original server, do the following:
  - Install the NVDIMMs in the same DIMM slots in the destination server.
  - Install the entire NVDIMM set (all the NVDIMM-Ns on the processor) on the destination

  server. This guideline would apply when replacing a system board due to system failure.

  If any of the requirements cannot be met during NVDIMM relocation, do the following:
  - Manually back up the NVDIMM-N data before relocating NVDIMM-Ns to another server.
  - Relocate the NVDIMM-Ns to another server.
  - Sanitize all NVDIMM-Ns on the new server before using them.

Requirements for relocating NVDIMMs or a set of NVDIMMs when the data does not have to be preserved

If data on the NVDIMM-N or set of NVDIMM-Ns does not have to be preserved, then

- Move the NVDIMM-Ns to the new location and sanitize all NVDIMM-Ns after installing them to the new location. For more information, see **NVDIMM sanitization**.

- Observe all DIMM and NVDIMM population guidelines.
- Observe the process for removing an NVDIMM.
- Observe the process for installing an NVDIMM.
- Review and configure the system settings for NVDIMMs. For more information, see **Configuring the server for NVDIMMs**.

Persistent Memory option

Persistent Memory, which offers the flexibility to deploy as dense memory or fast storage and features Intel Optane persistent memory, enables per-socket memory capacity of up to 3.0 TB. Persistent Memory, together with traditional volatile DRAM DIMMs, provide fast, high-capacity, cost-effective memory and storage to transform big data workloads and analytics by enabling data to be stored, moved, and processed quickly.

Persistent Memory modules use the standard DIMM form factor and are installed alongside DIMMs in a server memory slot. Persistent Memory modules are designed for use only with second-generation Intel Xeon Scalable processors, and are available in the following capacities:

- 128 GB
- 256 GB
- 512 GB

Persistent Memory module-processor compatibility

Persistent Memory modules are supported only in servers with second-generation Intel Xeon Scalable processors installed.

System requirements for Persistent Memory module support

IMPORTANT: Hitachi Vantara recommends that you implement best practice configurations for high availability (HA) such as clustered configurations.

Before installing Persistent Memory modules, make sure that the following components and software are available:

A supported HA800 server using second-generation Intel Xeon Scalable processors.

- DDR4 Standard Memory RDIMMs or LRDIMMs (the number will vary based on your chosen configuration).
- Supported firmware and drives:
  - System ROM version 2.10 or later
  - Server Platform Services (SPS) Firmware version 04.01.04.296
  - iLO 5 Firmware version 1.43
  - Innovation Engine Firmware version 2.1.x or later
- A supported operating system:
  - Windows Server 2012 R2 with persistent memory drivers from Hitachi Vantara
  - Windows Server 2016 with persistent memory drivers from Hitachi Vantara
  - Windows Server 2019
  - Red Hat Enterprise Linux 7.6 and later
  - Red Hat Enterprise Linux 8.0 and later

- SUSE Linux Enterprise Server 12 SP4 and later
- SUSE Linux Enterprise Server 15 with SUSE-SU-2019:0224-1 or later kernel update
- SUSE Linux Enterprise Server 15 SP1 with SUSE-SU-2019:1550-1 or later kernel update
- VMware vSphere 6.7 U2 + Express Patch 10 (ESXi670-201906002) or later (supports App Direct and Memory modes)
- VMware vSphere 6.5 U3 or later (supports Memory mode)

- Hardware and licensing requirements for optional encryption of the Persistent Memory modules:
  - TPM 2.0 (local key encryption)
  - iOL Advanced License (remote key encryption)
  - Key management server (remote key encryption)

For more information, see the *Persistent Memory User Guide* on the (**https://knowledge.hitachivantara.com/Documents/Servers**).

Installing Persistent Memory modules

Use this procedure only for new Persistent Memory module installations. If you are migrating this Persistent Memory module from another server, see the *Persistent Memory User Guide* on the (**https://knowledge.hitachivantara.com/Documents/Servers**).

Prerequisites

Before you perform this procedure, make sure that you have the following items available:

- The components included with the hardware option kit
- A T-10 Torx screwdriver might be needed to unlock the access panel.

Procedure

1. Observe the following alerts:

   CAUTION: DIMMs and Persistent Memory modules are keyed for proper alignment. Align notches on the DIMM or Persistent Memory module with the corresponding notches in the slot before installing the component. Do not force the DIMM or Persistent Memory module into the slot. When installed properly, not all DIMMs or Persistent Memory modules will face in the same direction.

   CAUTION: Electrostatic discharge can damage electronic components. Be sure you are properly grounded before beginning this procedure.

   CAUTION: Failure to properly handle Persistent Memory modules can damage the component and the system board connector.

   IMPORTANT: Hitachi Vantara recommends that you implement best practice configurations for high availability (HA) such as clustered configurations.

2. Power down the server (**Power down the server**).
3. Remove all power:

a. Disconnect each power cord from the power source.

b. Disconnect each power cord from the server.

4. Do one of the following:

   a. Extend the server from the rack (**Extend the server from the rack**).

   b. Remove the server from the rack (**Remove the server from the rack**).

5. Place the server on a flat, level work surface.

6. **Remove the access panel.**

7. Open the DIMM slot latches.
8. Install the Persistent Memory module.

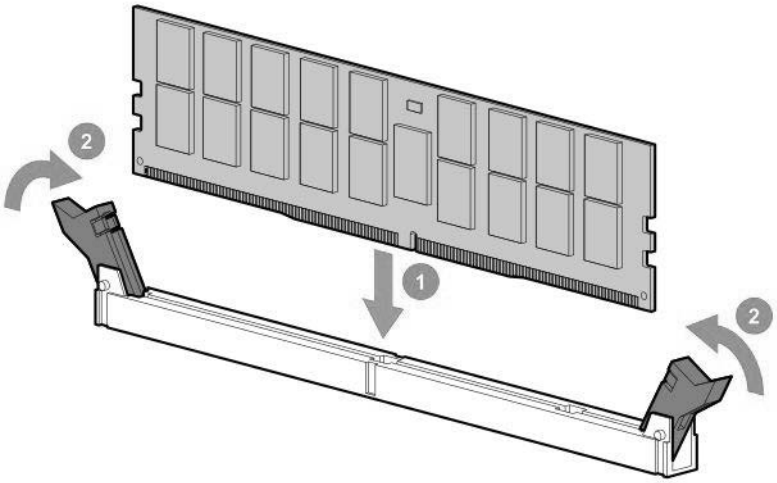

9. Install the access panel (**Install the access panel**).

10. Slide or install the server into the rack.

11. If removed, reconnect all power cables.

12. Power up the server.

13. Configure the server for Persistent Memory.

    For more information, see **Configuring the server for Persistent Memory**.

Configuring the server for Persistent Memory

After installing Persistent Memory modules, configure the server for Persistent Memory.

IMPORTANT: Always follow recommendations from your software application provider for high-availability best practices to ensure maximum uptime and data protection.

A number of configuration tools are available, including:

- UEFI System Utilities—Access System Utilities through the Remote Console to configure the server by pressing the **F9**
  key during POST.
- iLO RESTful API—Use the iLO RESTful API through tools such as the RESTful Interface Tool (ilorest) or other third- party tools.
- Persistent Memory Management Utility—The Persistent Memory Management Utility is a desktop application used to configure the server for Persistent Memory, as well as evaluate and monitor the server memory configuration layout.

For more information, see the *Persistent Memory User Guide* on the (**https://knowledge.hitachivantara.com/Documents/Servers**).

Installing a high-performance fan

This kit is available to meet some extended ambient operating temperatures above 35 degrees Celsius. For more information about the qualifications for extended ambient configurations, contact customer support.

The high-performance fans are used for 8-SFF and 10 SFF drive configurations. They are also required for the 10 SFF SAS/SATA/NVMe Combo backplane option and for ASHRAE compliant configurations.

For more information, contact customer support.

Prerequisites

Before installing this option, be sure you have the following: The components included with the hardware option kit

Procedure

1. Observe the following alert:

   IMPORTANT: After removing a high-performance (dual-rotor) fan, install or replace the fan within 60 seconds. Otherwise, the server will shut down gracefully.

2. Power down the server (**Power down the server**).
3. Remove all power:
   a. Disconnect each power cord from the power source.
   b. Disconnect each power cord from the server.
4. Do one of the following:
   a. Extend the server from the rack (**Extend the server from the rack**).

b. Remove the server from the rack (**Remove the server from the rack**).

5. Remove the access panel (**Remove the access panel**).

6. Remove all standard fans from the fan bays.

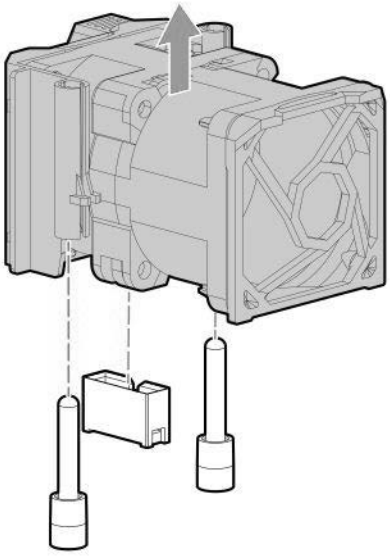

7. Remove fan blanks from the fan bays, if installed.

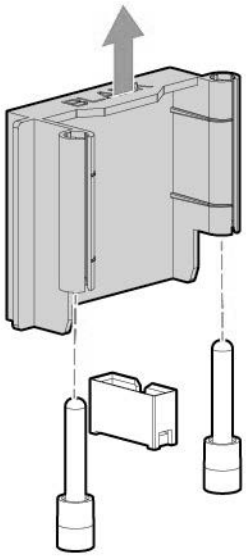

8. Install high-performance fans in each of the seven fan bays.

If needed, ensure each fan is securely installed by pressing the tab. Do not press on other areas of the fan.

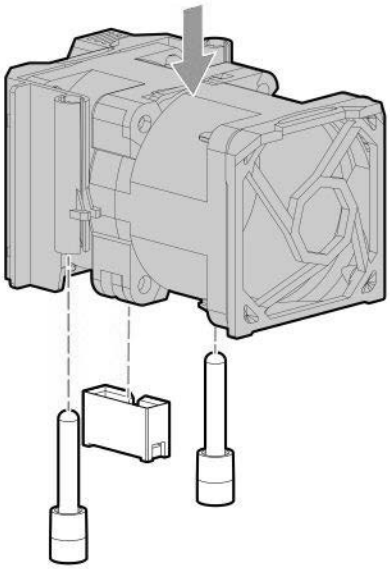

9. Install the access panel (**Install the access panel**).
10. Slide the server into the rack.
11. Connect each power cord to the server.
12. Connect each power cord to the power source.
13. Power up the server (**Power up the server**).

Drive options

Depending on the configuration, this server supports SAS, SATA, NVMe, and uFF M.2 drives. For more information on drive support, see **Device numbers**.

When adding hard drives to the server, observe the following general guidelines:

- The system automatically sets all device numbers.
- If only one hard drive is used, install it in the bay with the lowest device number.
- Drives should be the same capacity to provide the greatest storage space efficiency when drives are grouped together into the same drive array.

Hot-plug drive guidelines

When adding drives to the server, observe the following general guidelines:

- The system automatically sets all device numbers.
- If only one drive is used, install it in the bay with the lowest device number.
- Drives should be the same capacity to provide the greatest storage space efficiency when drives are grouped together into the same drive array.

Removing the hard drive blank

Remove the component as indicated.

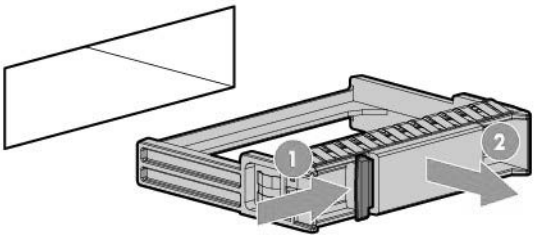

Installing a hot-plug SAS or SATA drive

Prerequisites

Before installing this option, be sure that you have the following:

The components included with the hardware option kit

Procedure

1. Remove the drive blank.

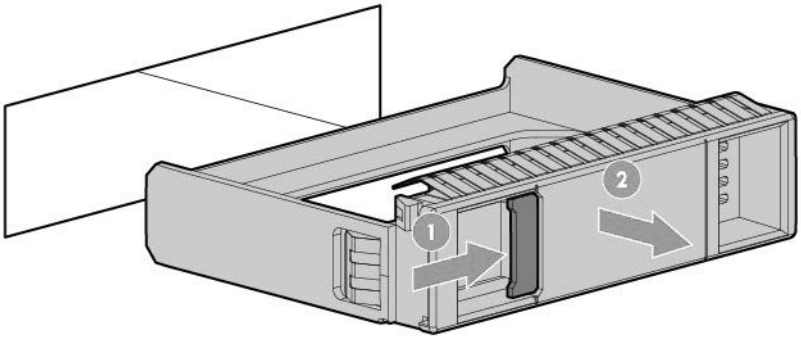

2. Prepare the drive.

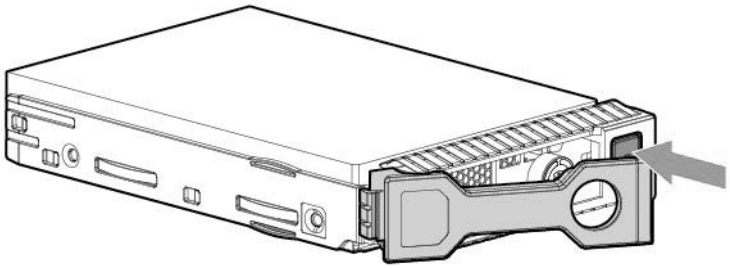

3. Install the drive.

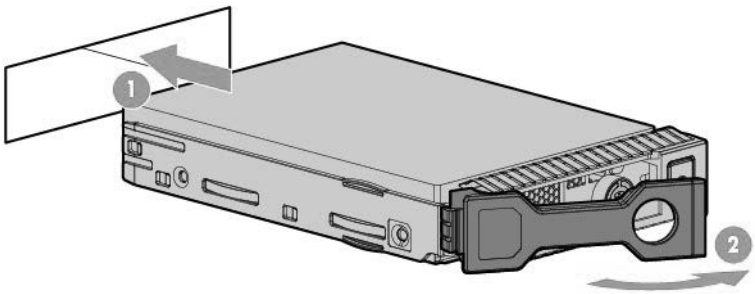

4. Determine the status of the drive from the drive LED definitions (**Hot-plug drive LED definitions**).

Removing a hot-plug SAS or SATA hard drive

CAUTION: For proper cooling, do not operate the server without the access panel, baffles, expansion slot covers, or blanks installed. If the server supports hot-plug components, minimize the amount of time the access panel is open.

1. Determine the status of the drive from the **hot-plug drive LED definitions**.
2. Back up all server data on the drive.
3. Remove the drive.

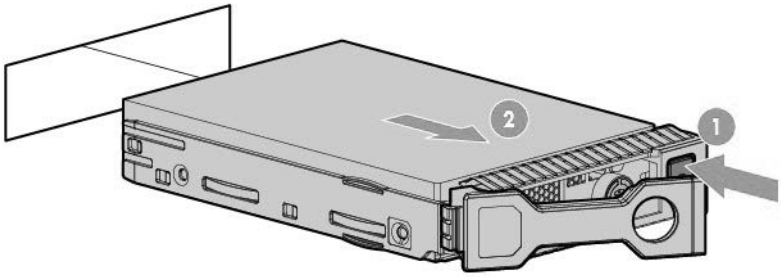

Installing the NVMe drives

NVMe drives are supported in 8 SFF and 10 SFF server configurations when the 10 SFF SAS/SATA/NVMe Combo backplane option or the 2 SFF NVMe backplane option is installed. When either backplane is installed, NVMe drives are required in bays 9 and 10. For more information, see **Device numbers**.

Prerequisites

NVMe drives are supported in the 8SFF and 10 SFF server configurations. Before installing this option, be sure you have the following:

The components included with the hardware option kit

Procedure

1. Observe the following alert:

   CAUTION: To prevent improper cooling and thermal damage, do not operate the server unless all bays are populated with either a component or a blank.

2. Remove the drive blank, if installed.

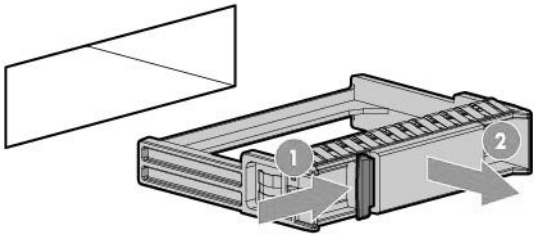

3. Press the Do Not Remove button to open the release handle.

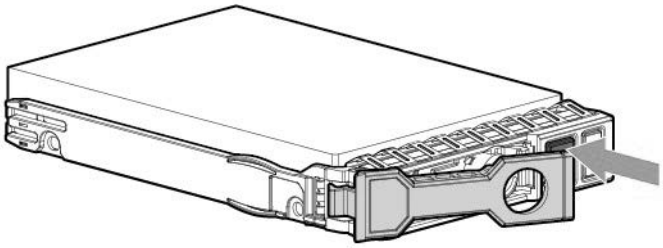

4. Install the drives.

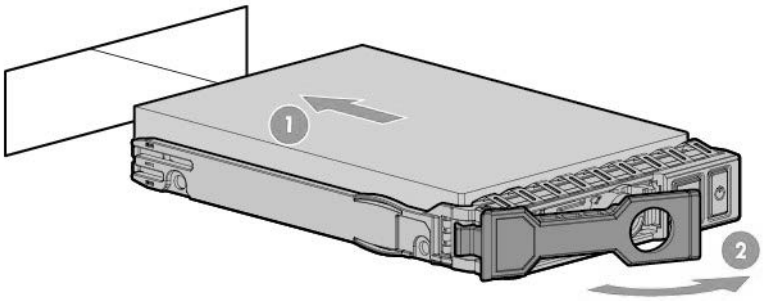

5. Install an SFF drive blank in any unused drive bays.

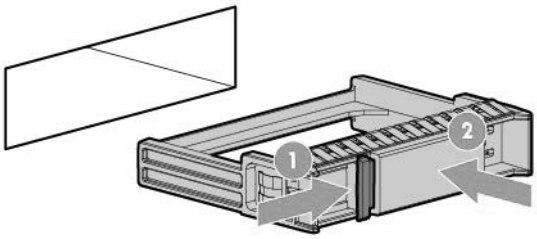

Removing and replacing an NVMe drive

An NVMe SSD is a PCIe BUS device. Devices attached to a PCIe bus cannot be removed without allowing the device and the bus to complete and cease signal/traffic flow.

Procedure

1. Back up all server data.
2. Observe the LED status of the drive and determine if it can be removed.
3. Remove the drive:
   a. Push the Power button.
      The Do Not Remove button illuminates and flashes.
   b. Wait until the flashing stops and the Do Not Remove button is no longer illuminated.
   c. Push the Do Not Remove button and then remove the drive.

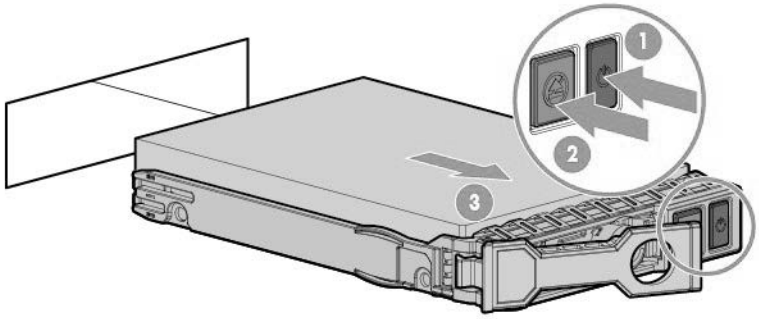

Installing a uFF drive and SCM drive carrier

Procedure

1. If needed, install the uFF drive into the drive carrier.

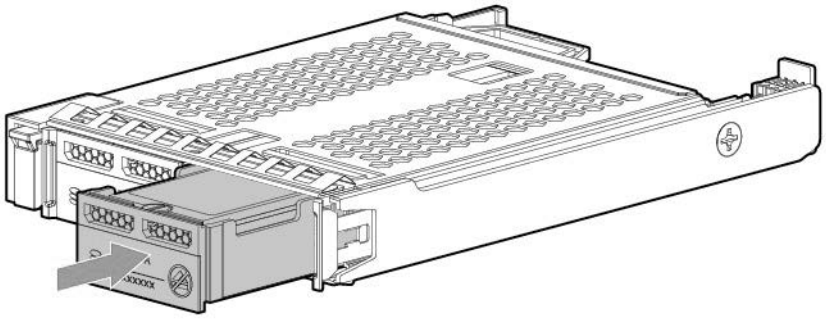

2. Remove the drive blank.

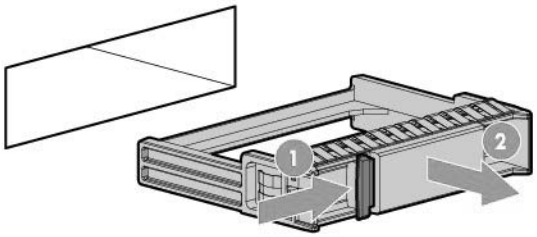

3. Install the drives.
   Push firmly near the ejection handle until the latching spring engages with the drive bay.

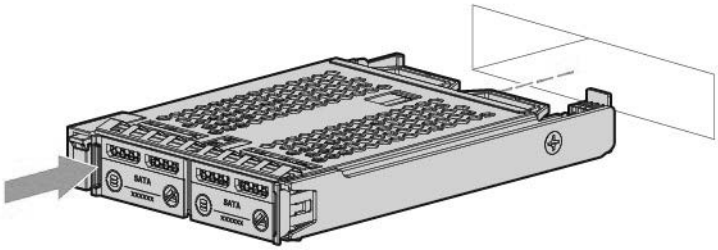

4. Power on the server.
   To configure the drive, use **Smart Storage Administrator**.

Removing and replacing a uFF drive

Procedure

1. Back up all server data.
2. Observe the LED status of the drive and determine if it can be removed.
3. Remove the drive.

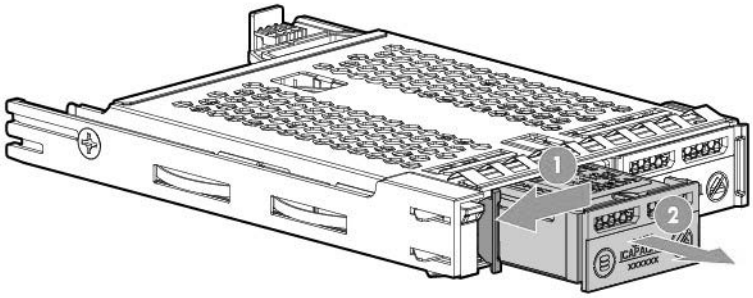

To remove the drive carrier:

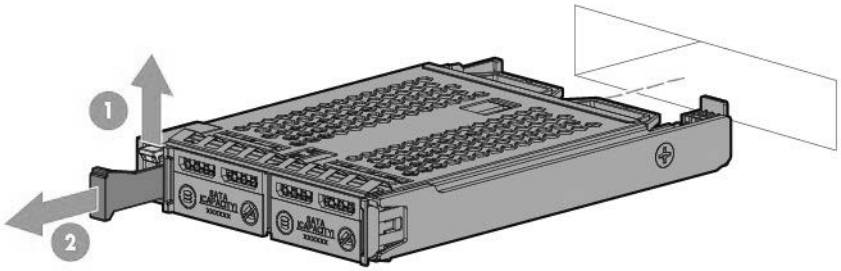

To replace the component, reverse the removal procedure.

Installing an 8 SFF optical drive

Prerequisites

Before installing an optical drive, be sure the 8 SFF display port/USB/optical blank option is installed. For more information, see **Installing an 8 SFF display port/USB/optical blank option**.

Procedure

1. Remove the optical drive blank.

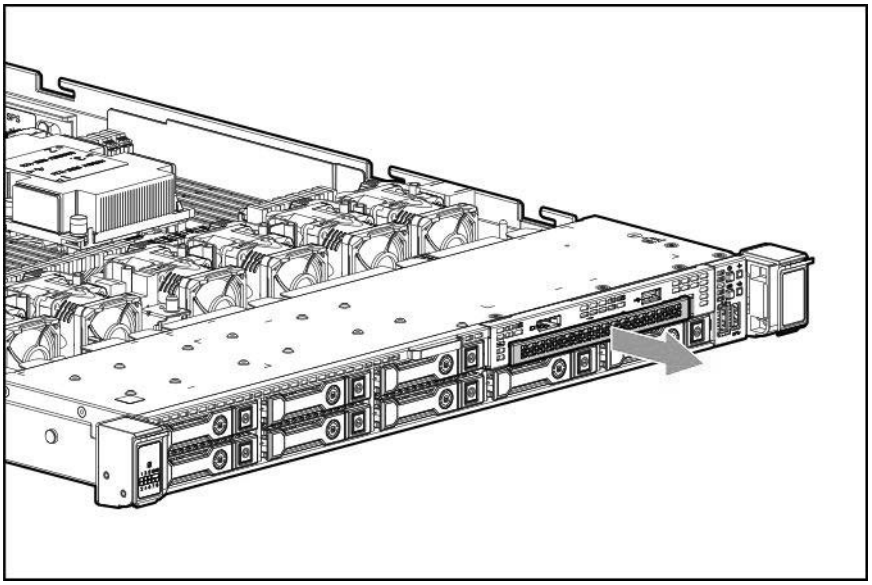

2. Install the optical drive.

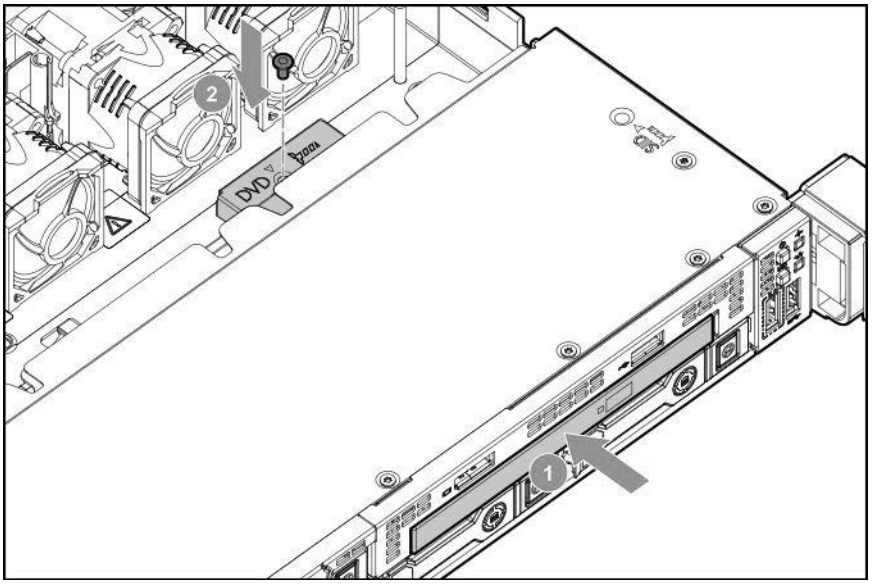

3. Connect the optical drive cable.

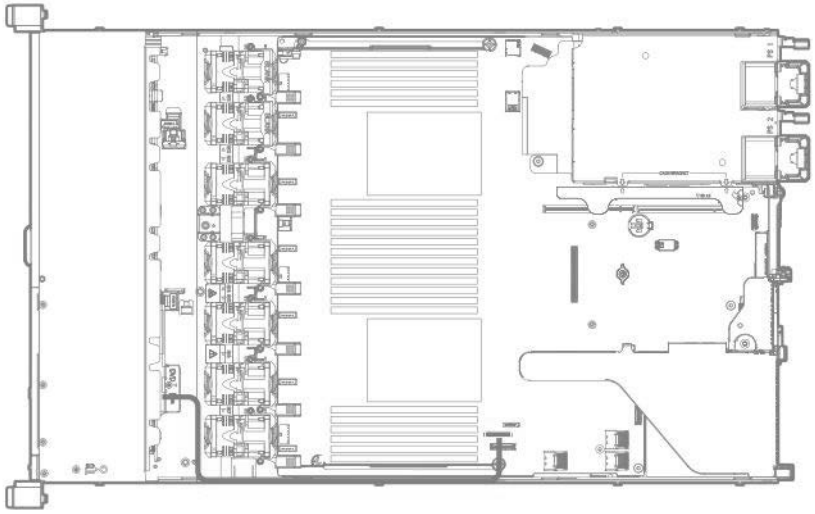

Universal media bay options

Installing a 2 SFF SAS/SATA drive cage

Prerequisites

Universal media bay options are compatible only with the 8 SFF chassis.

Hitachi Vantara recommends installing the P816i-a controller to support 10 SAS/SATA drives. For more information, see **Installing a smart array P816i-a SR Gen10 Controller option**.

Additional controller options are available. For additional cabling configurations, contact customer support.

In addition, be sure that you have the following:

- The components included with the hardware option kit
- T-10 Torx screwdriver
- Additional cables, as needed. For more information, see **SFF cables**.
- 2 SFF SAS or SATA drives or blanks

  For more information, contact a Hitachi Vantara authorized reseller.

Procedure

1. Back up all server data.
2. Power down the server (**Power down the server**).
3. Remove all power:
   a. Disconnect each power cord from the power source.
   b. Disconnect each power cord from the server.

4. Do one of the following:

   a. Extend the server from the rack (**Extend the server from the rack**).

   b. Remove the server from the rack (**Remove the server from the rack**).

5. Remove the access panel (**Remove the access panel**).

6. Remove the universal media bay blank.

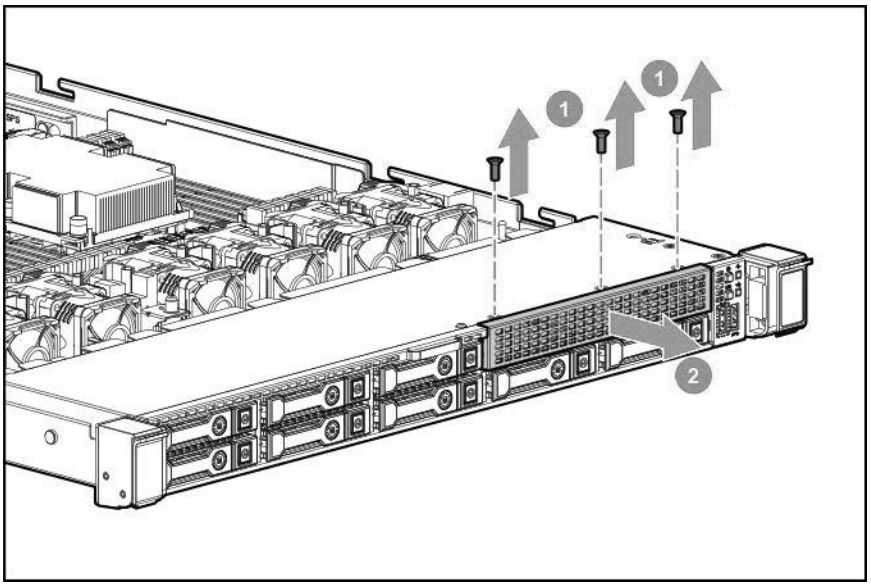

7. Install the 2 SFF SAS/SATA drive cage.

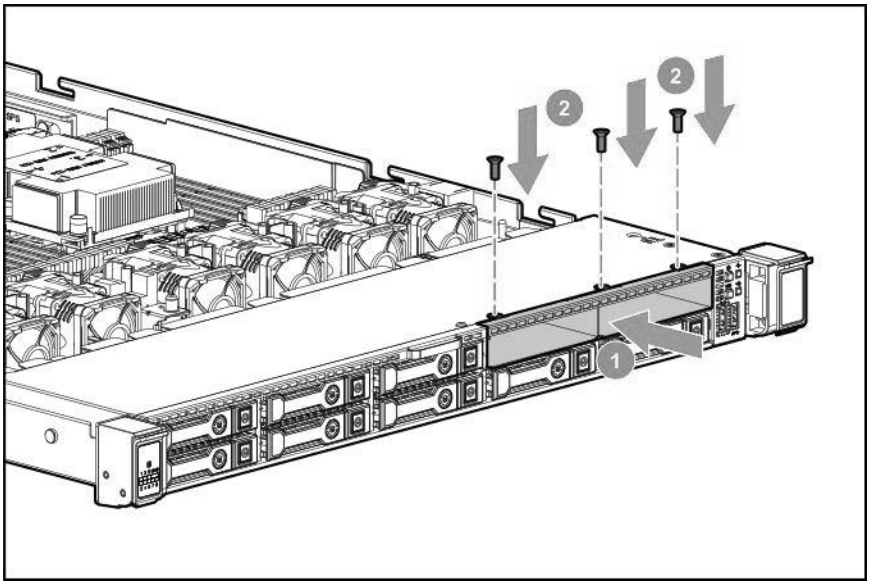

8. Observe the following:

NOTE: The following information describes the standard cable routing for this component. For more information, contact customer support.

---

9. Route and connect the data cable.

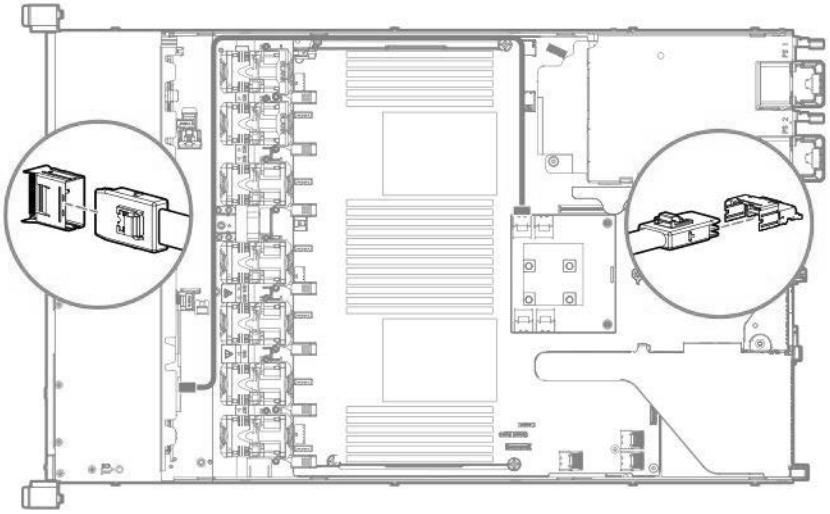

10. Route and connect the power cable.

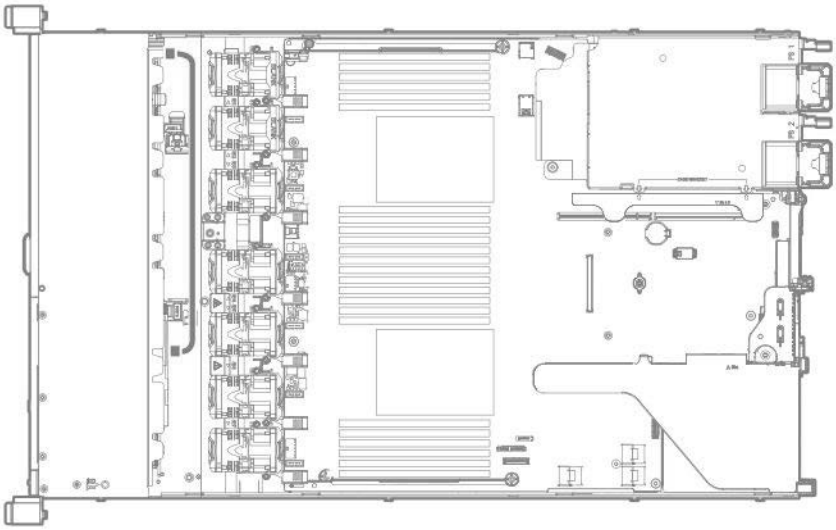

11. Install the access panel (**Install the access panel**).
12. Install the server in the rack.
13. Connect each power cord to the server.
14. Connect each power cord to the power source.
15. Power up the server (**Power up the server**).
16. Install drives.

Installing a 2 SFF NVMe drive cage option

Prerequisites

Before installing this option, be sure that you have the following:

- The components included with the hardware option kit
- T-10 Torx screwdriver
- T-15 Torx screwdriver
- Additional cables, as needed. For more information, see **SFF cables**.
- NVMe drives

  For more information, contact a Hitachi Vantara authorized reseller.

Procedure

1. Back up all server data.
2. Power down the server (**Power down the server**).
3. Remove all power:
   a. Disconnect each power cord from the power source.
   b. Disconnect each power cord from the server.
4. Do one of the following:
   a. Extend the server from the rack (**Extend the server from the rack**).
   b. Remove the server from the rack (**Remove the server from the rack**).
5. Remove the access panel (**Remove the access panel**).
6. Use a T-10 Torx screwdriver to remove the universal media bay blank.

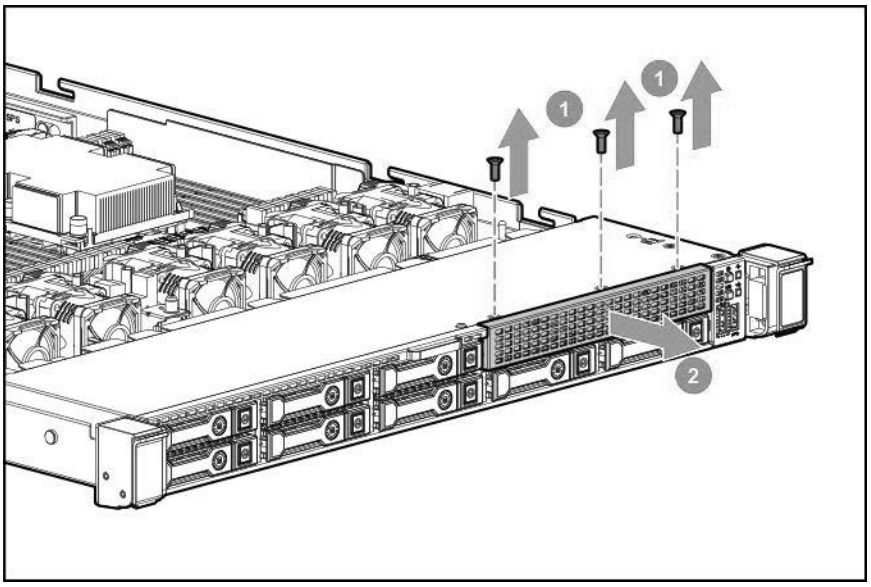

7. Use a T-10 Torx screwdriver to install the 2 SFF NVMe drive cage.

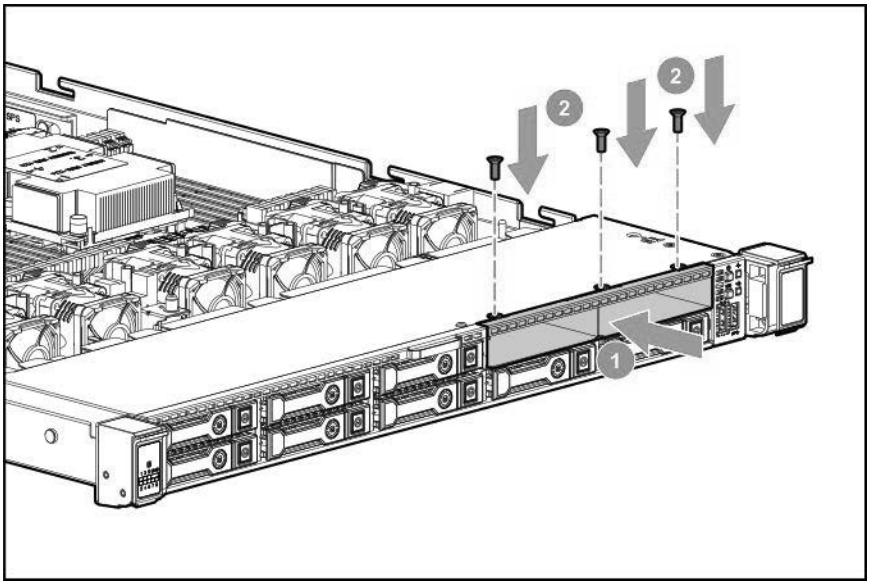

8. Remove the primary PCI riser cage (**Remove the primary PCI riser cage**).

9. Use a T-15 Torx screwdriver to remove the existing riser board.

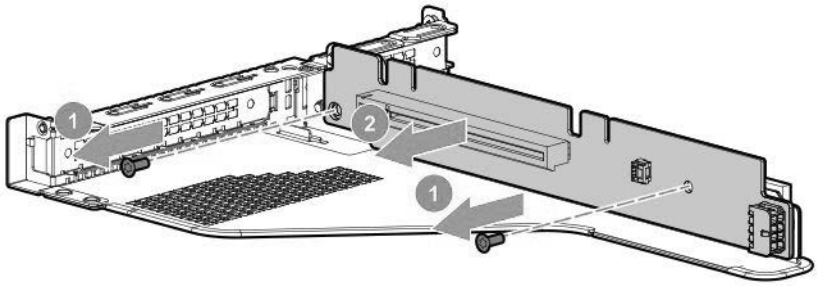

10. Use a T-15 Torx screwdriver to install the riser provided in the kit in the primary PCI riser cage.

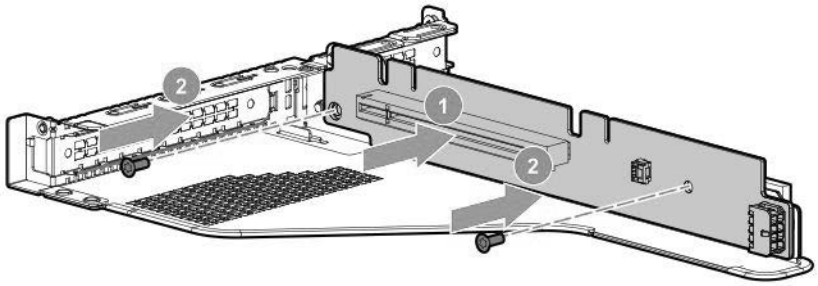

11. Observe the following:

NOTE: The following information describes the standard cable routing for this component. For more information, contact customer support.

---

12. Route and connect the data cable.

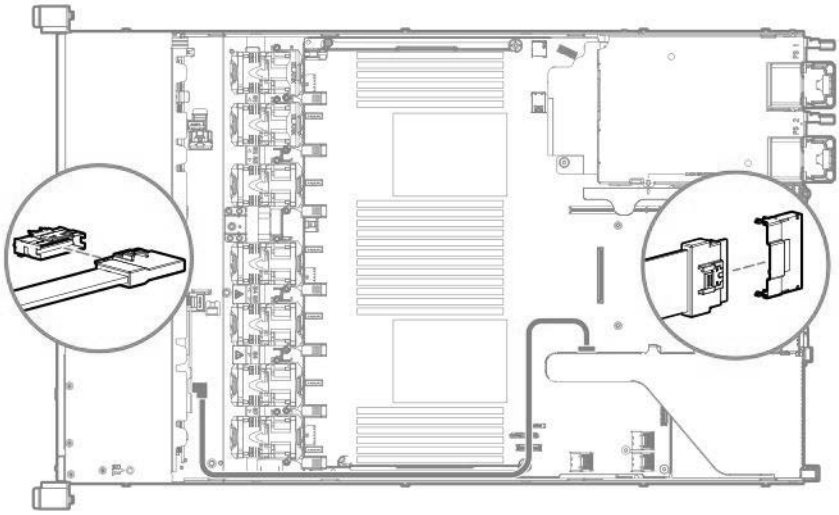

13. Install the primary PCI riser cage.
14. Install the access panel (**Install the access panel**).
15. Install the server in the rack.
16. Connect each power cord to the server.
17. Connect each power cord to the power source.
18. Power up the server (**Power up the server**).
19. Install drives.

Installing a 2 SFF Smart Carrier M.2 (SCM) drive cage

Prerequisites

Hitachi Vantara recommends **installing the P816i-a controller** to support more than eight SAS/SATA drives. Additional controller options are available. For more information, contact customer support.

Before installing this option, be sure you that have the following:

- The components included with the hardware option kit
- T-10 Torx screwdriver
- Additional cables, as needed. For more information, see **SFF cables**.
- 2 SFF SAS/SATA drives, 4 uFF M.2 drives, or blanks

  For more information, contact a Hitachi Vantara authorized reseller.

Procedure

1. Back up all server data.
2. Power down the server (**Power down the server**).
3. Remove all power:

a. Disconnect each power cord from the power source.

b. Disconnect each power cord from the server.

4. Do one of the following:

a. Extend the server from the rack (**Extend the server from the rack**).

b. Remove the server from the rack (**Remove the server from the rack**).

5. Remove the access panel (**Remove the access panel**).

6. Remove the universal media bay blank.

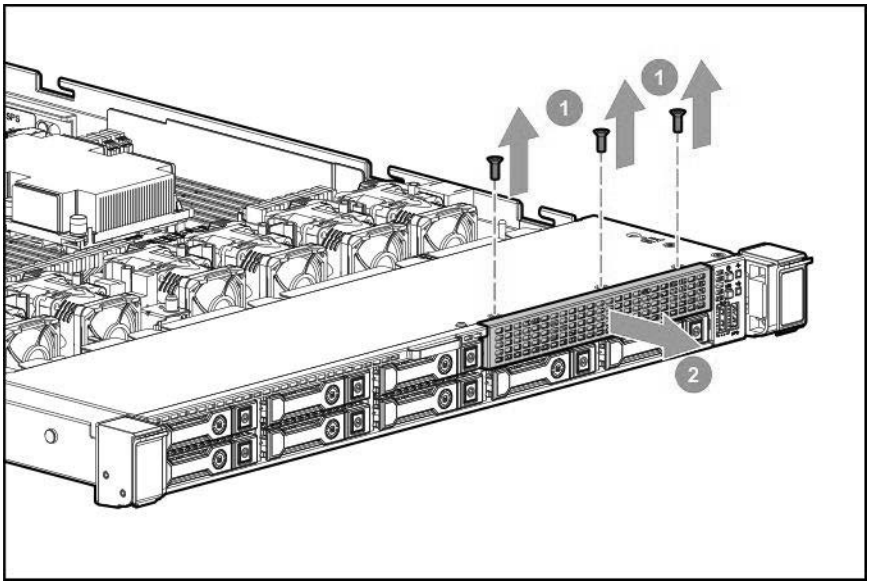

7. Install the drive cage.

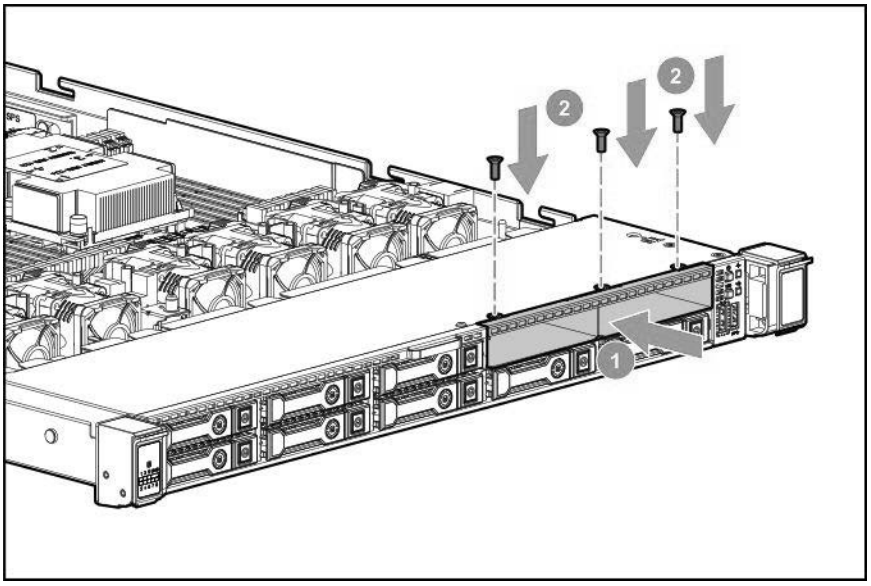

8. Observe the following:

NOTE: The following information describes the standard cable routing for this component. For more information, contact customer support.

9. Route and connect the data cable.

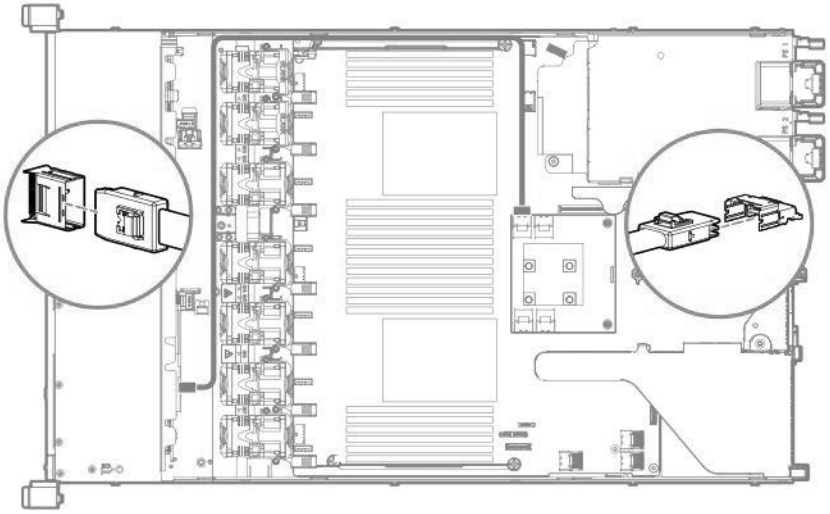

10. Route and connect the power cable.

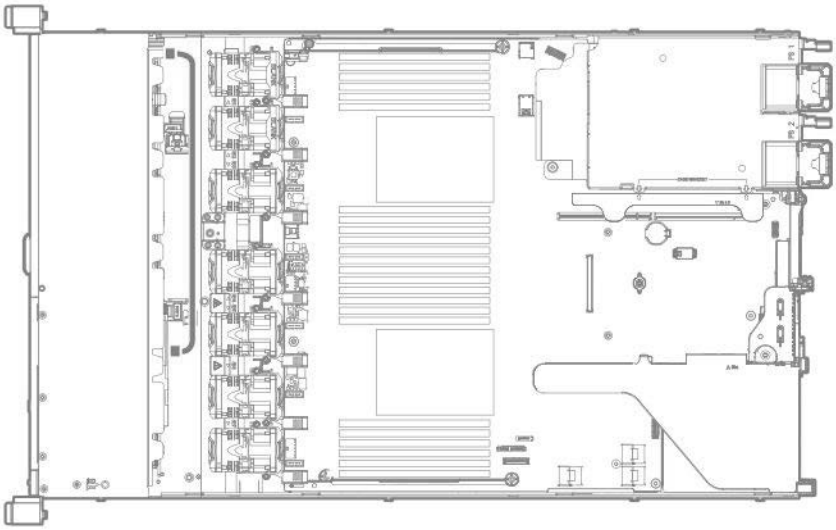

11. Install the access panel (**Install the access panel**).
12. Install the server in the rack.
13. Connect each power cord to the server.
14. Connect each power cord to the power source.
15. Power up the server (**Power up the server**).
16. Install drives.

Installing an 8 SFF display port/USB/optical blank option

Prerequisites

Before installing this option, be sure that you have the following:

- The components included with the hardware option kit
- T-10 Torx screwdriver
- An optical drive, if installing

  For more information, contact a Hitachi Vantara authorized reseller.

Procedure

1. Back up all server data.
2. Power down the server (**Power down the server**).
3. Remove all power:
   a. Disconnect each power cord from the power source.
   b. Disconnect each power cord from the server.
4. Do one of the following:
   a. Extend the server from the rack (**Extend the server from the rack**).
   b. Remove the server from the rack (**Remove the server from the rack**).
5. Remove the access panel (**Remove the access panel**).
6. Remove the universal media bay blank.

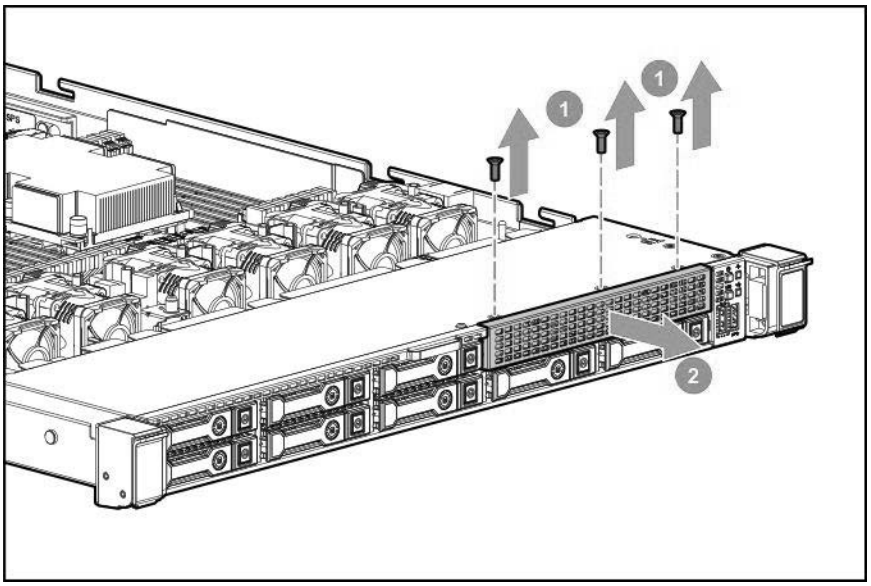

7. Install the 8 SFF display port/USB/optical blank option.

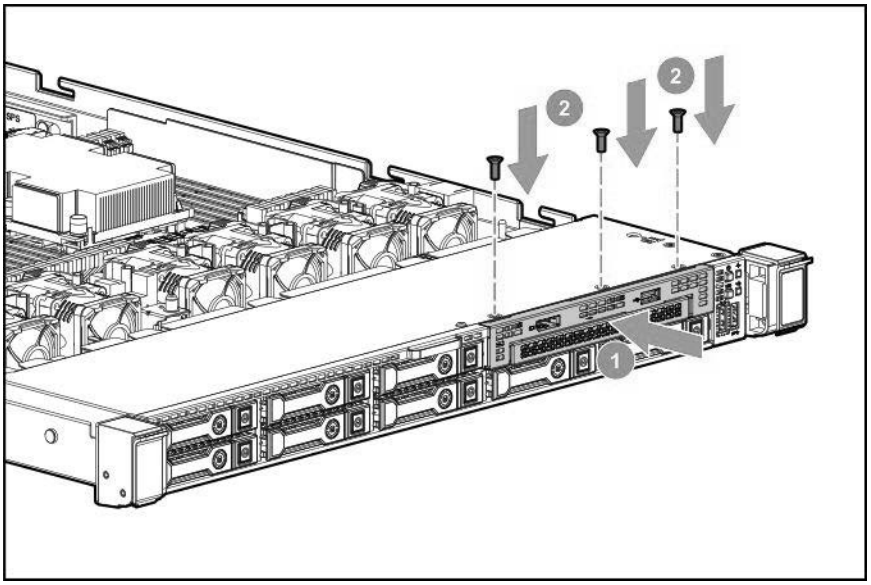

8. Route and connect the data cable.

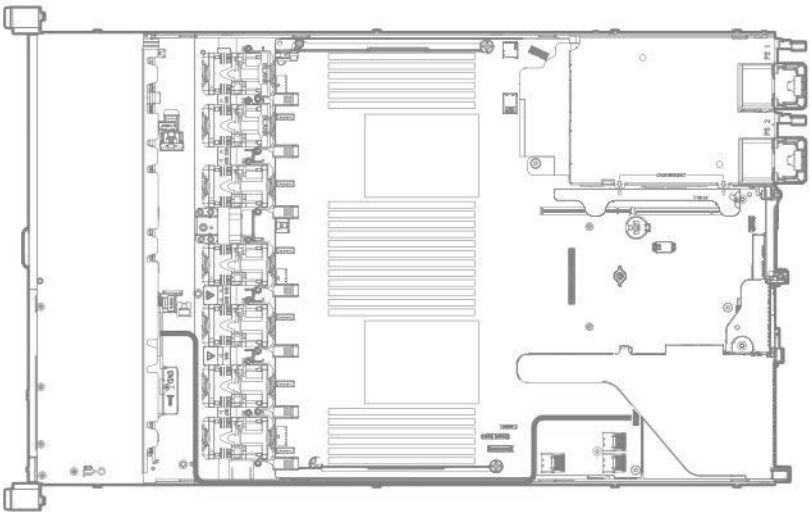

9. If needed, install an optical drive (**Installing an 8 SFF optical drive**).
10. Install the access panel (**Install the access panel**).
11. Install the server in the rack.
12. Connect each power cord to the server.
13. Connect each power cord to the power source.
14. Power up the server (**Power up the server**).

Installing the 4 LFF optical drive option

Prerequisites

Before installing this option, be sure that you have the following:

- The components included with the hardware option kit
- T-10 Torx screwdriver
- LFF optical cable option kit
- An optical drive

  For more information, contact a Hitachi Vantara authorized reseller.

Procedure

1. Back up all server data.
2. Power down the server (**Power down the server**).
3. Remove all power:
   a. Disconnect each power cord from the power source.
   b. Disconnect each power cord from the server.
4. Do one of the following:
   a. Extend the server from the rack (**Extend the server from the rack**).
   b. Remove the server from the rack (**Remove the server from the rack**).
5. Remove the access panel (**Remove the access panel**).
6. Remove the LFF optical drive bay blank.

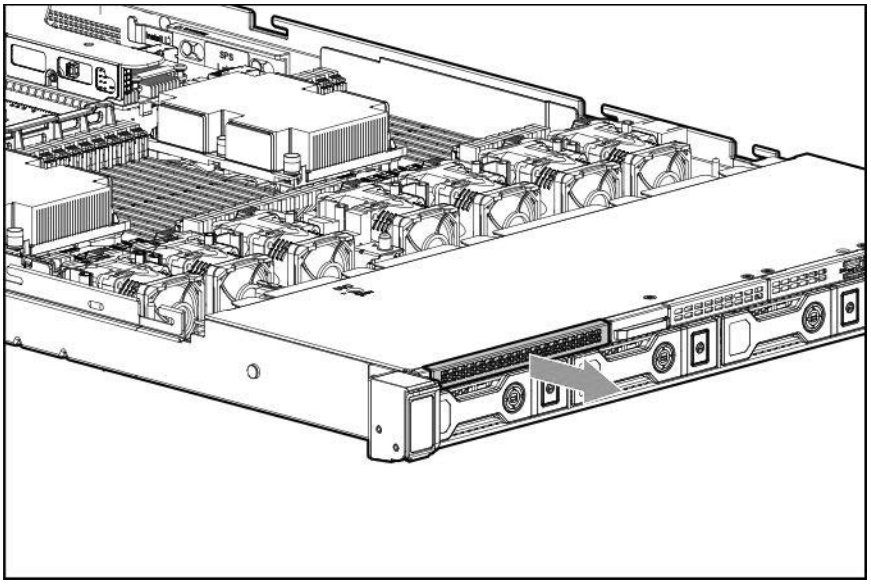

7. Install the optical drive.

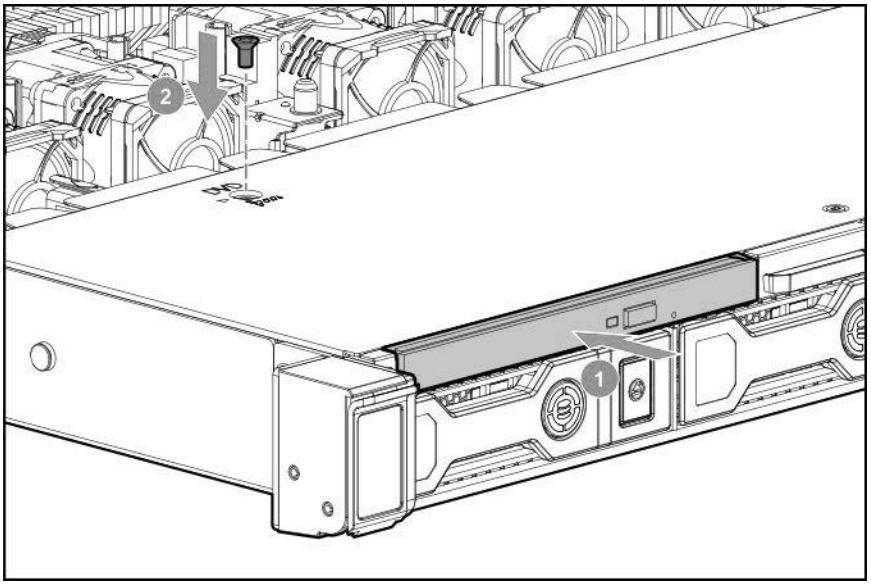

8. Observe the following:

NOTE: The following information describes the standard cable routing for this component. For more information, contact customer support.

---

9. Connect the optical drive cable to the optical drive backplane and to the SATA optical/storage drive connector.

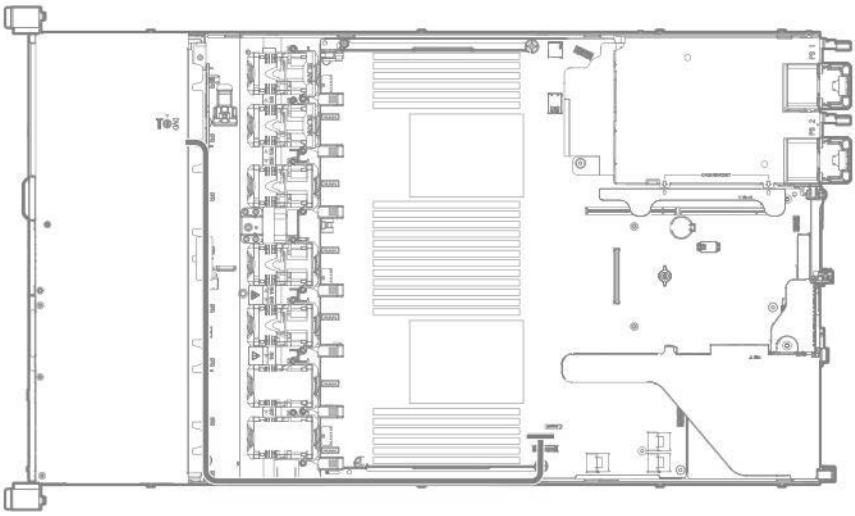

10. Install the access panel (**Install the access panel**).
11. Install the server in the rack.
12. Connect each power cord to the server.
13. Connect each power cord to the power source.
14. Power up the server (**Power up the server**).

Installing the rear drive riser cage option

The rear drive riser cage option supports low-profile PCI riser options in slot 2.

Prerequisites

Before installing this option, be sure you have the following:

- The components included with the hardware option kit
- T-10 and T-15 Torx screwdriver
- 1 SFF drive, 2 uFF M.2 drives, or blanks

Procedure

1. Power down the server (**Power down the server**).
2. Remove all power:
   a. Disconnect each power cord from the power source.
   b. Disconnect each power cord from the server.
3. Do one of the following:
   a. Extend the server from the rack (**Extend the server from the rack**).
   b. Remove the server from the rack (**Remove the server from the rack**).
4. Remove the access panel (**Remove the access panel**).
5. Remove the primary PCI riser cage (**Remove the primary PCI riser cage**).
6. If installed, remove any expansion boards installed in the riser board.

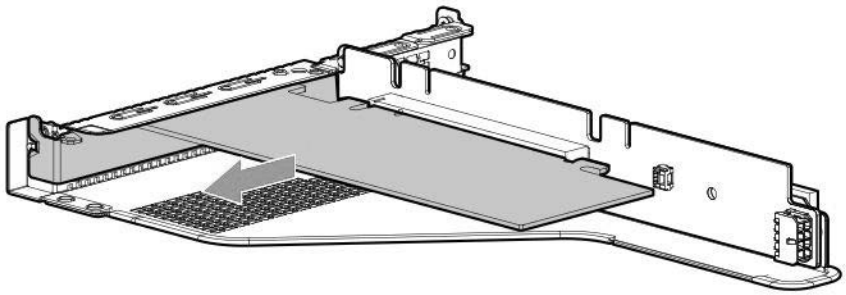

7. Remove the riser board. Set aside for later use.

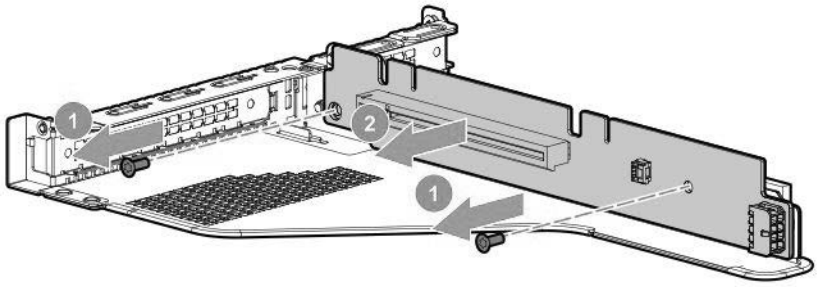

8. If installed, remove the slot 2 bracket from the primary riser cage.

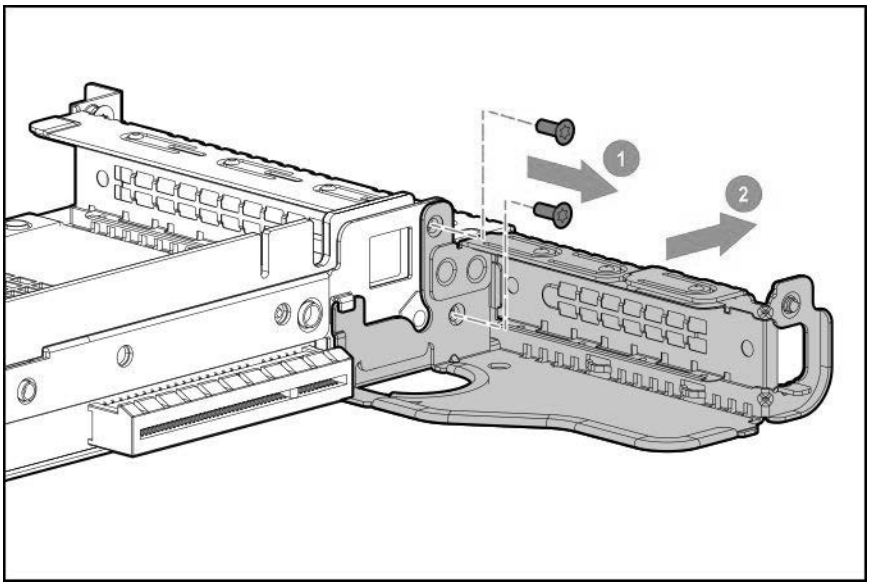

9. If needed, install the riser board removed in step 7 on the rear drive riser cage bracket.

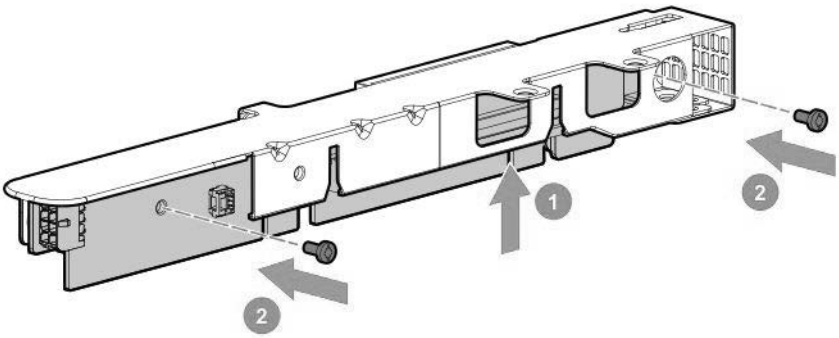

10. Install the drive cage on the riser cage.

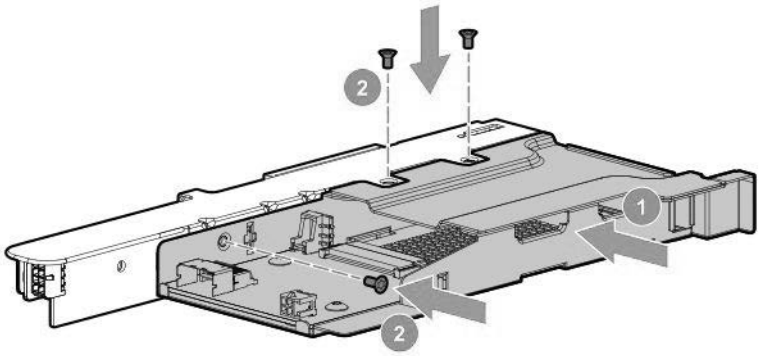

11. If needed, install the riser cage bracket on the rear drive riser cage.

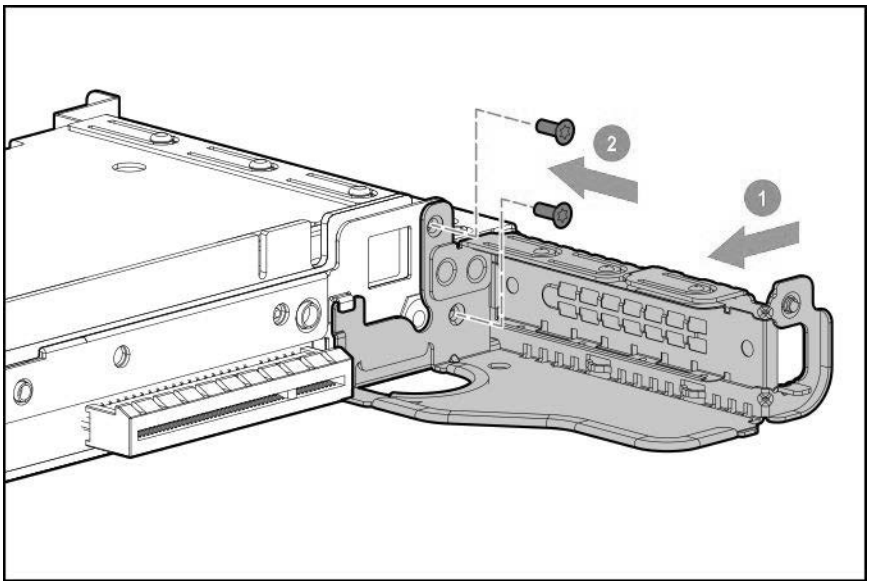

12. If needed, install an expansion board (**Installing an expansion board in the primary riser cage**).

13. Install the rear drive riser cage in the primary riser cage position.

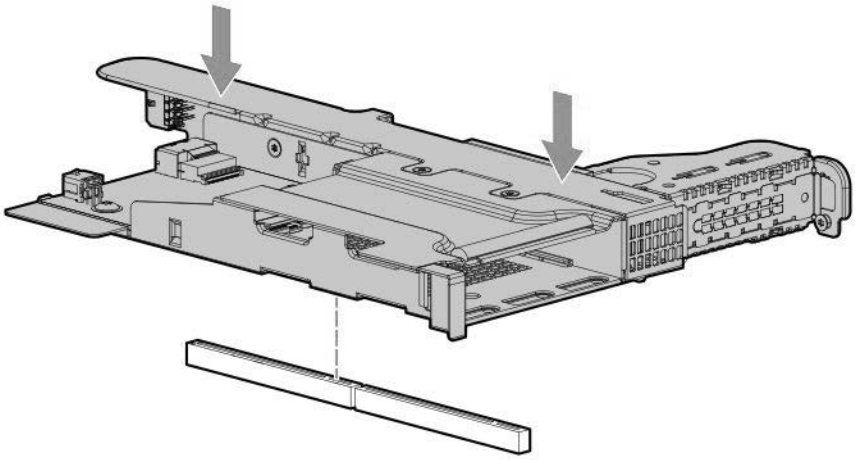

14. Route and connect the data and power cables.

Hitachi Vantara recommends using embedded SATA solutions when connecting the cable. Other options exist. For more information, contact customer support.

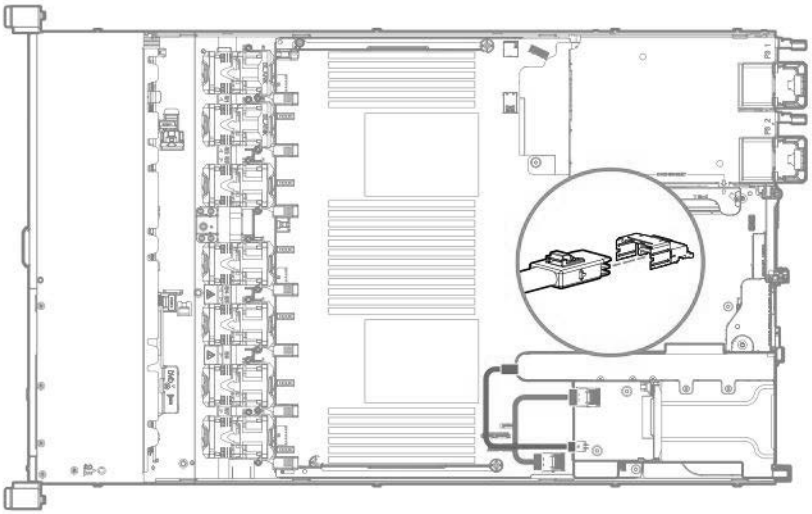

15. Install drives or blanks (**Drive options**).
16. Install the access panel (**Install the access panel**).
17. Install the server in the rack.
18. Power up the server (**Power up the server**).
19. Connect each power cord to the server.
20. Connect each power cord to the power source.

Primary PCI riser cage options

The primary PCI riser cage supports the following:

- Slot 1: Full-height, 3/4-length expansion boards (up to 9.5")
- Slot 2:
  - Half-length, half-height expansion boards
  - 3/4-length expansion boards when either a low-profile type -a controller or no controller is installed.

Installing an optional primary PCI riser board

Prerequisites

Before installing this option, be sure you have the following:

- The components included with the hardware option kit
- T-15 Torx screwdriver

Procedure

1. Back up all server data.
2. Power down the server (**Power down the server**).
3. Remove all power:
   a. Disconnect each power cord from the power source.
   b. Disconnect each power cord from the server.
4. Do one of the following:
   a. Extend the server from the rack (**Extend the server from the rack).**
   b. Remove the server from the rack (**Remove the server from the rack**).
5. Remove the access panel **(Remove the access panel).**
6. Remove the primary PCI riser cage (**Remove the primary PCI riser cage**).
7. If needed, remove any expansion boards installed in the riser cage.

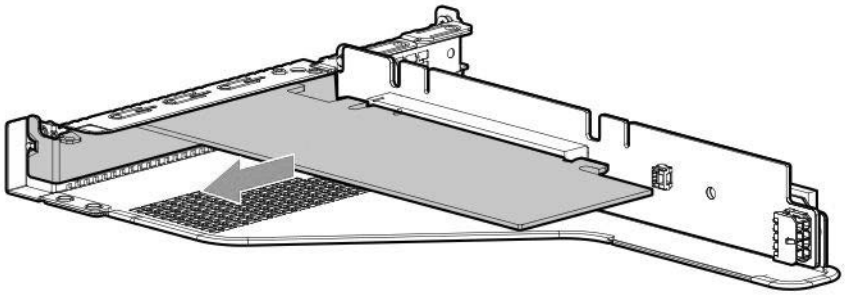

8. Remove the existing riser board from the PCI riser cage.

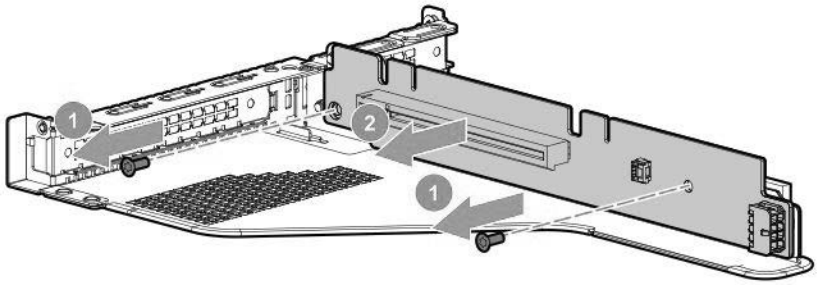

9. Install the optional riser board in the riser cage.

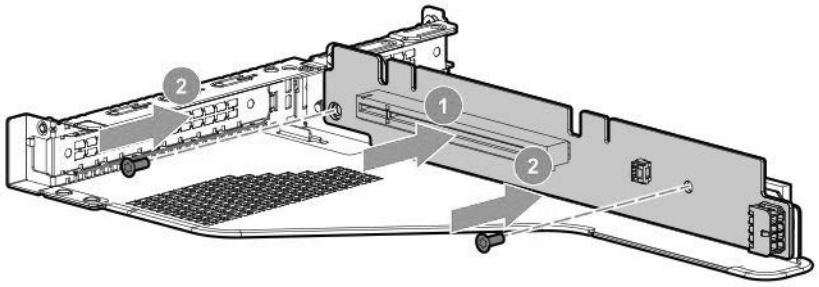

10. Install the following, as needed:
    - Expansion boards (**Installing an expansion board in the primary riser cage**)
    - GPU (**Installing an accelerator or GPU in the primary riser cage**)
    - Controllers (**Smart array controller options**)
11. Install the riser cage (**Install the primary PCI riser cage**).
12. Install the access panel (**Install the access panel**).
13. Install the server in the rack.
14. Connect each power cord to the server.
15. Connect each power cord to the power source.
16. Power up the server (**Power up the server**).

Installing the SATA M.2 2280 riser option

Prerequisites

Before installing this option, be sure that you have the following:

- The components included with the hardware option kit
- Up to two 2280 form factor M.2 drives
- T-15 Torx screwdriver

Procedure

1. Power down the server (**Power down the server**).
2. Remove all power:
    a. Disconnect each power cord from the power source.
    b. Disconnect each power cord from the server.
3. Do one of the following:
    a. Extend the server from the rack (**Extend the server from the rack**).
    b. Remove the server from the rack (**Remove the server from the rack**).

4. Remove the access panel (**Remove the access panel**).
5. Remove the primary PCI riser cage (**Remove the primary PCI riser cage**).
6. If needed, remove any expansion boards installed in the riser cage.

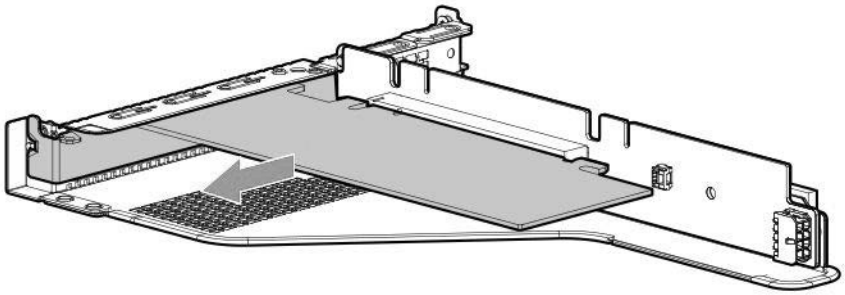

7. Remove the existing riser board from the riser cage.

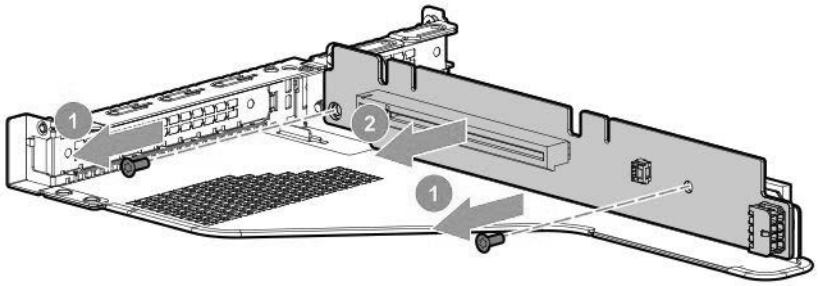

8. Install the M.2 riser board.

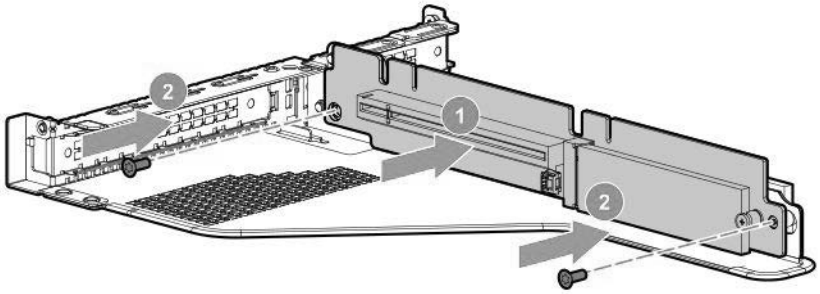

9. Remove the screw securing the standoff on the riser.
10. Install the M.2 drives.

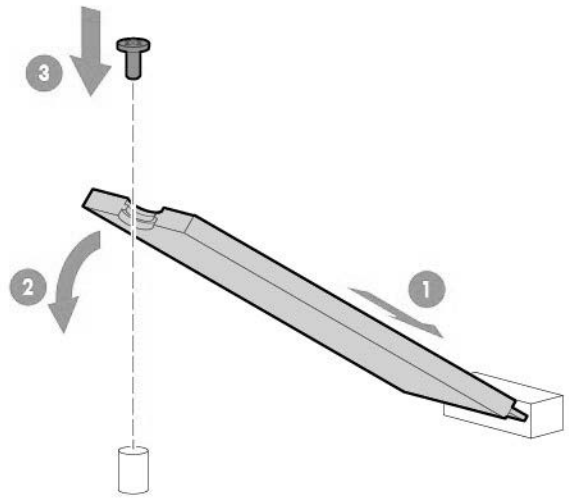

11. Install the following, as needed:
    - Expansion boards (**Installing an expansion board in the primary riser cage**)
    - Controllers (**Smart array controller options**)
12. Install the primary PCI riser cage (**Install the primary PCI riser cage**).
13. Install the access panel (**Install the access panel**).
14. Install the server in the rack.

Installing an expansion board in the primary riser cage

Use these instructions to install expansion boards such as Smart I/O cards (such as DSC-25 2-port SFP28 card), solid state NVMe/PCIe Add-In-Cards, HBAs, CNAs, InfiniBand adapters, and accelerators.

Prerequisites

Before installing this option, be sure you have the following:

- The components included with the hardware option kit.
- T-10 Torx screwdriver.

Procedure

1. Observe the following alerts:

   WARNING: To reduce the risk of personal injury from hot surfaces, allow the drives and the internal system components to cool before touching them.

   CAUTION: To prevent damage to electrical components, properly ground the server before beginning any installation procedure. Improper grounding can cause electrostatic discharge.
2. Back up all server data.
3. **Power down the server**.

4. Remove all power:
   a. Disconnect each power cord from the power source.
   b. Disconnect each power cord from the server.

5. Do one of the following:
   a. **Extend the server from the rack**.
   b. **Remove the server from the rack**.

6. **Remove the access panel**.
7. **Remove the primary PCI riser cage**.
8. Remove the expansion slot blank.

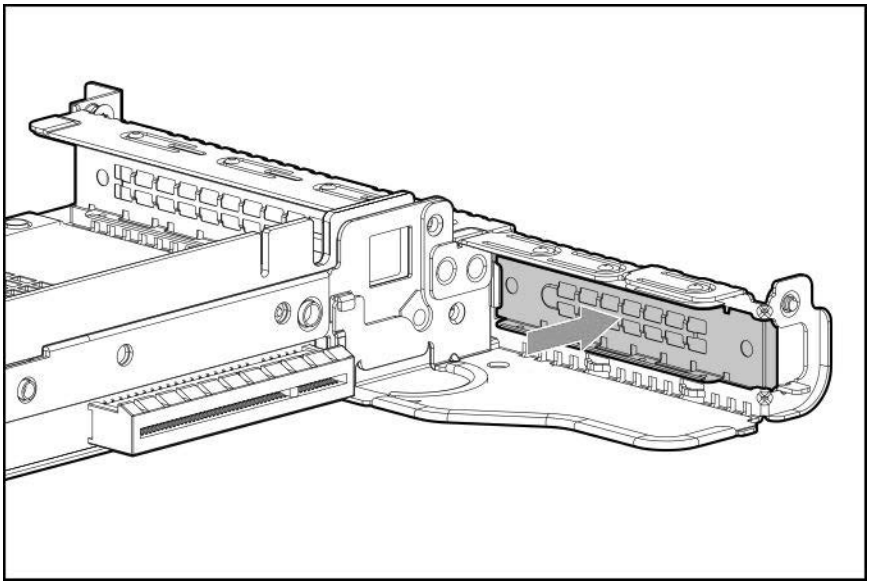

9. Use a T-10 Torx screwdriver to Install the expansion board.

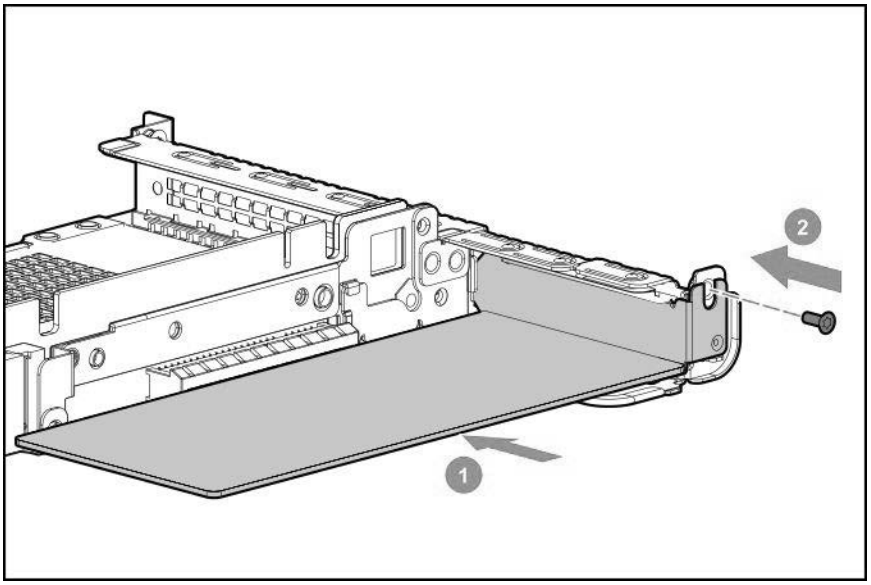

10. Connect any required internal or external cables to the expansion board.

11. **Install the primary PCI riser cage**.
12. **Install the access panel**.
13. Install the server in the rack.
14. Connect each power cord to the server.
15. Connect each power cord to the power source.
16. **Power up the server**.

Installing an accelerator or GPU in the primary riser cage

Use these instructions to install accelerator options, including GPUs, in the server.

Prerequisites

This option requires the standard primary PCI riser cage.

Before installing this option, be sure that the power supplies support the installation of this option. For more information, contact customer support.

In addition, be sure that you have the following items:

- The components included with the hardware option kit
- HA810 CPU1 Cable Kit (If installing a high-powered GPU kit)

Procedure

1. Observe the following alerts:

   WARNING: To reduce the risk of personal injury from hot surfaces, allow the drives and the internal system components to cool before touching them.

   CAUTION: To prevent damage to electrical components, properly ground the server before beginning any installation procedure. Improper grounding can cause electrostatic discharge.

2. Back up all server data.
3. Power down the server (**Power down the server**).
4. Remove all power:
   a. Disconnect each power cord from the power source.
   b. Disconnect each power cord from the server.
5. Do one of the following:
   a. Extend the server from the rack (**Extend the server from the rack**).
   b. Remove the server from the rack (**Remove the server from the rack**).
6. Remove the access panel (**Remove the access panel**).
7. Remove the primary PCI riser cage (**Remove the primary PCI riser cage**).

8. Install the card in the x16 slot in the primary PCI riser cage position.
9. If installing a GPU requiring greater than 75 W, connect the power cable to the primary riser power connector.

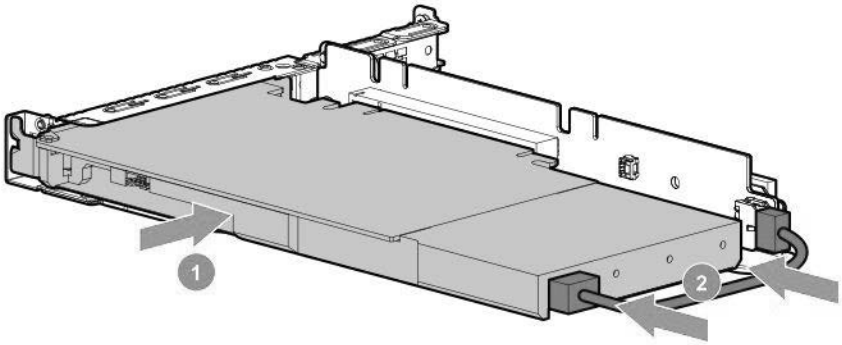

10. If the card requires rear support, install the GPU support bracket.

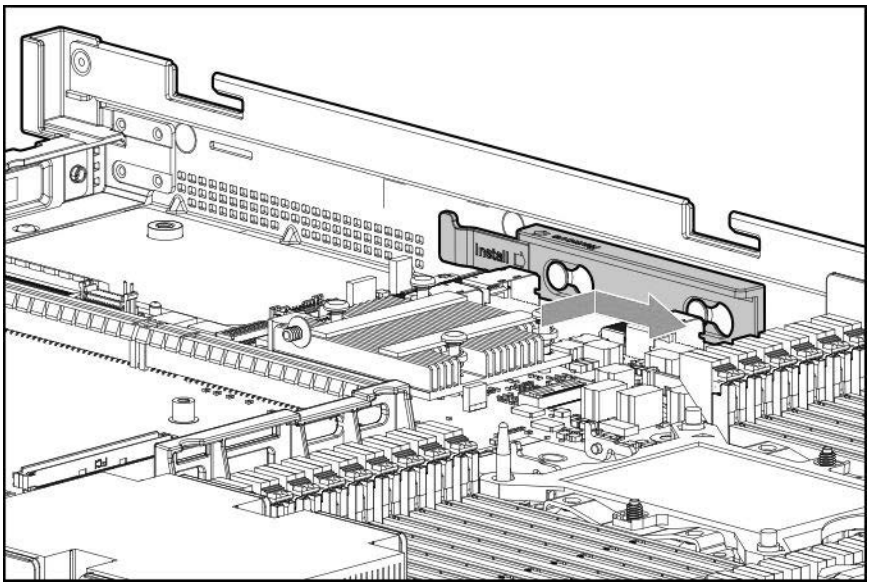

11. Install the riser cage (**Install the primary PCI riser cage**).
12. Install the access panel (**Install the access panel**).
13. Install the server in the rack.
14. Connect each power cord to the server.
15. Connect each power cord to the power source.
16. Power up the server (**Power up the server**).

Secondary PCI riser options

Installing a secondary full-height PCI riser cage option

When installed, this riser cage supports full-height, 3/4-length expansion boards up to 9.5". PCIe3 slot 2 is no longer available.

Prerequisites

This option requires a dual processor configuration.

Before installing this option, be sure you have the following:

- The components included with the hardware option kit
- Any expansion boards or controllers you plan to install
- T-10 Torx screwdriver
- T-15 Torx screwdriver

Procedure

1. Power down the server (**Power down the server**).
2. Remove all power:
   a. Disconnect each power cord from the power source.
   b. Disconnect each power cord from the server.
3. Do one of the following:
   a. Extend the server from the rack (**Extend the server from the rack**).
   b. Remove the server from the rack (**Remove the server from the rack**).
4. Remove the access panel (**Remove the access panel**).
5. Remove the primary PCI riser cage (**Remove the primary PCI riser cage**).
6. Use a T-10 Torx screwdriver to remove the slot 2 bracket from the primary riser cage.

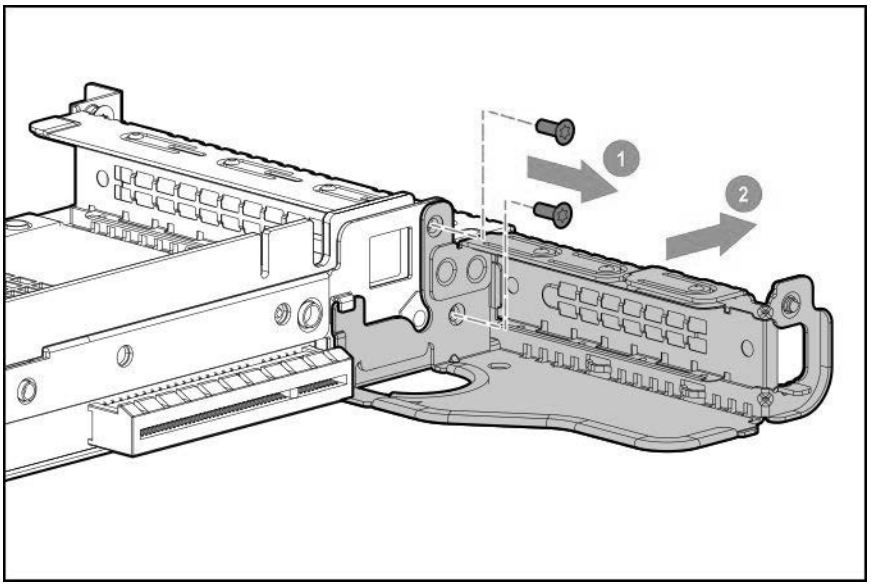

7. If installed, remove the low-profile riser cage.

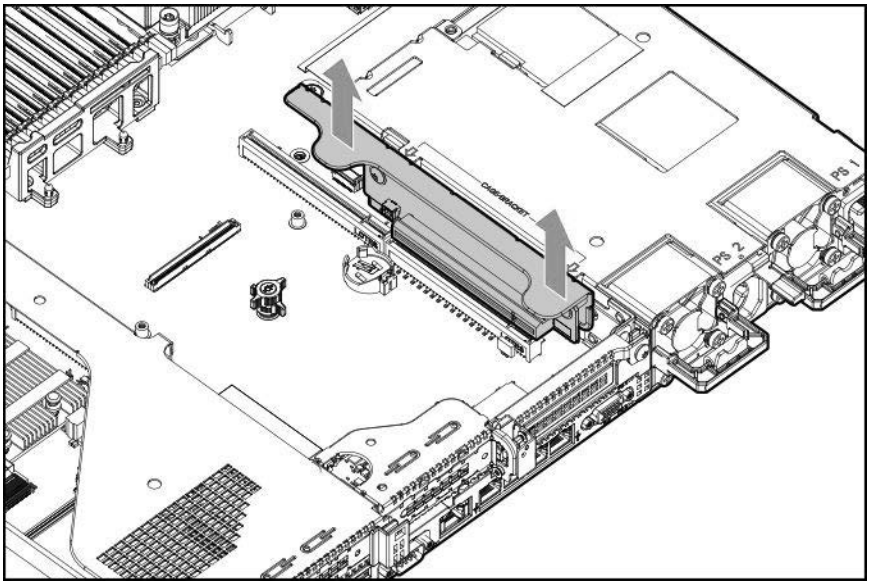

8. Lift and remove the secondary riser cage latch.

Use a T-15 Torx screwdriver to remove the riser cage screw.

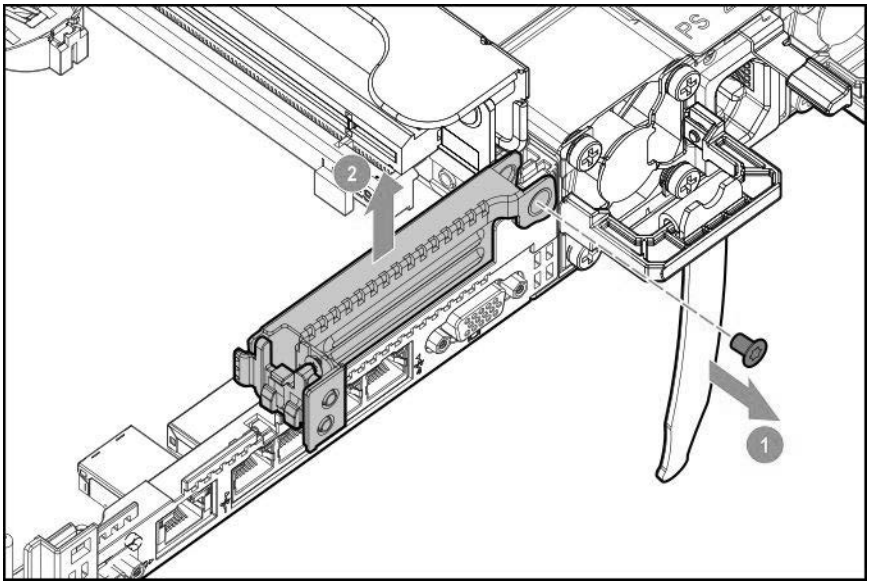

9. Install the full height PCIe x16 riser cage latch.

Use a T-15 Torx screwdriver to remove the riser cage screw.

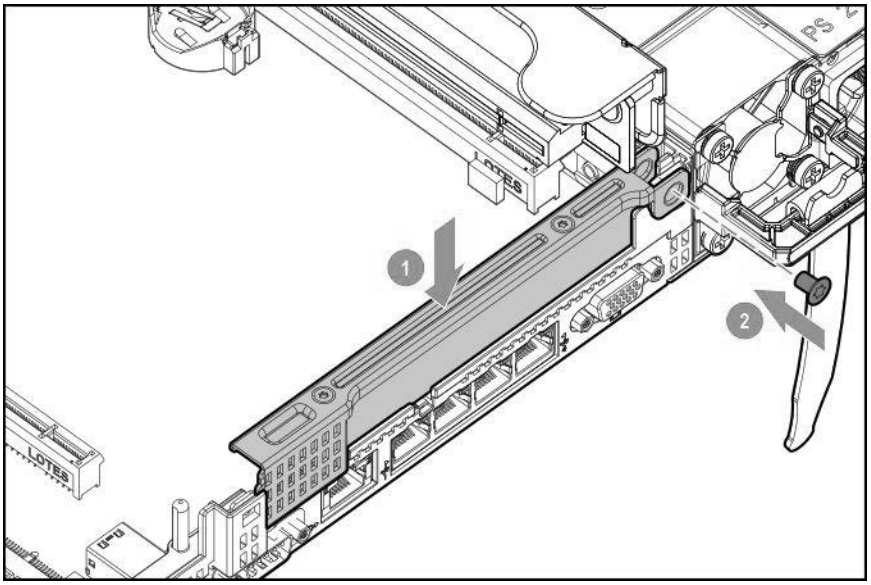

10. Install the riser cage.

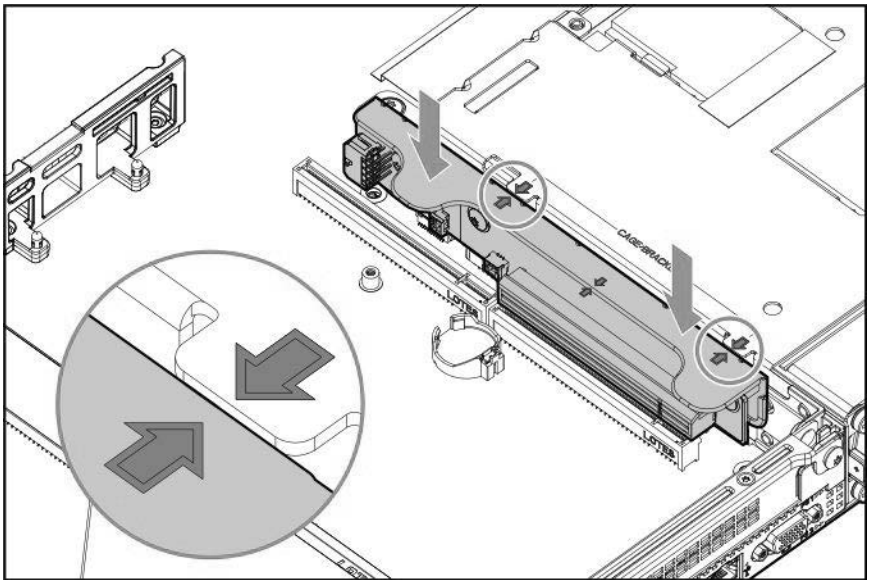

11. Install one of the following, as needed:

- Expansion boards (**Installing an expansion board in the secondary riser cage**)
- GPU (**Installing an accelerator or GPU in the secondary riser cage**)
- Controllers (**Smart array controller options**)

12. Install the access panel (**Install the access panel**).

13. Install the server in the rack.

14. Connect each power cord to the server.

15. Connect each power cord to the power source.

16. Power up the server (**Power up the server**).

Installing a secondary low-profile PCIe slot riser cage option

When installed, this riser cage provides an additional low profile slot and supports half-length/half-height expansion boards.

Prerequisites

This option requires a dual processor configuration.

Before installing this option, be sure that you have the

following: The components included with the hardware option

kit

Procedure

1. Observe the following alerts:

   WARNING: To reduce the risk of personal injury from hot surfaces, allow the drives and the internal system components to cool before touching them.

   CAUTION: To prevent damage to electrical components, properly ground the server before beginning any installation procedure. Improper grounding can cause electrostatic discharge.

2. Back up all server data.
3. Power down the server (**Power down the server**).
4. Remove all power:
   a. Disconnect each power cord from the power source.
   b. Disconnect each power cord from the server.
5. Do one of the following:
   a. Extend the server from the rack (**Extend the server from the rack**).
   b. Remove the server from the rack (**Remove the server from the rack**).
6. Remove the access panel (**Remove the access panel**).
7. Install the secondary low-profile PCIe slot riser cage.

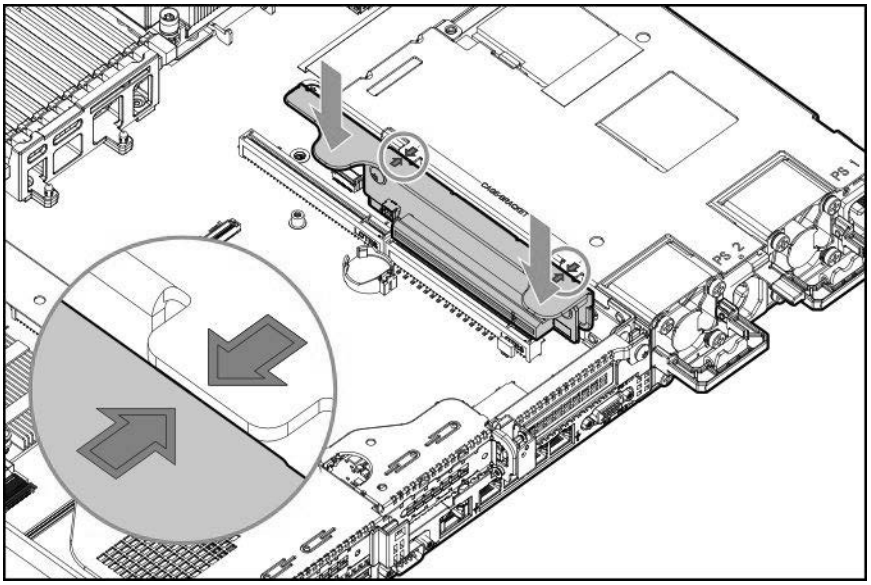

8. Install one of the following, as needed:
   - Expansion boards (**Installing an expansion board in the secondary riser cage**)
   - Controllers (**Smart array controller options**)
9. Install the access panel (**Install the access panel**).
10. Install the server into the rack (**Installing the server into the rack**).
11. Connect each power cord to the server.
12. Connect each power cord to the power source.
13. Power up the server (**Power up the server**).

Installing an expansion board in the secondary riser cage

Use these instructions to install expansion boards such as Smart I/O cards (such as DSC-25 2-port SFP28 cards), solid state NVMe/PCIe Add-In-Cards, HBAs, CNAs, InfiniBand adapters, and accelerators.

Prerequisites

Before installing this option, be sure that you have the following:

- The components included with the hardware option kit
- T-10 Torx screwdriver

Procedure

1. Observe the following alerts:

   WARNING: To reduce the risk of personal injury from hot surfaces, allow the drives and the internal system components to cool before touching them.

CAUTION: To prevent damage to electrical components, properly ground the server before beginning any installation procedure. Improper grounding can cause electrostatic discharge.

2. Back up all server data.
3. Power down the server (**Power down the server**).
4. Remove all power:
   a. Disconnect each power cord from the power source.
   b. Disconnect each power cord from the server.
5. Do one of the following:
   a. **Extend the server from the rack**.
   b. **Remove the server from the rack**.
6. **Remove the access panel**.
7. Install a secondary riser cage:
   - Low-profile (**Installing a secondary low-profile PCIe slot riser cage option**)
   - Full-height (**Installing a secondary full-height PCI riser cage option**)
8. Remove the expansion slot blank:

   A T-10 Torx screwdriver is required to remove the expansion slot blank.

   - Half-length

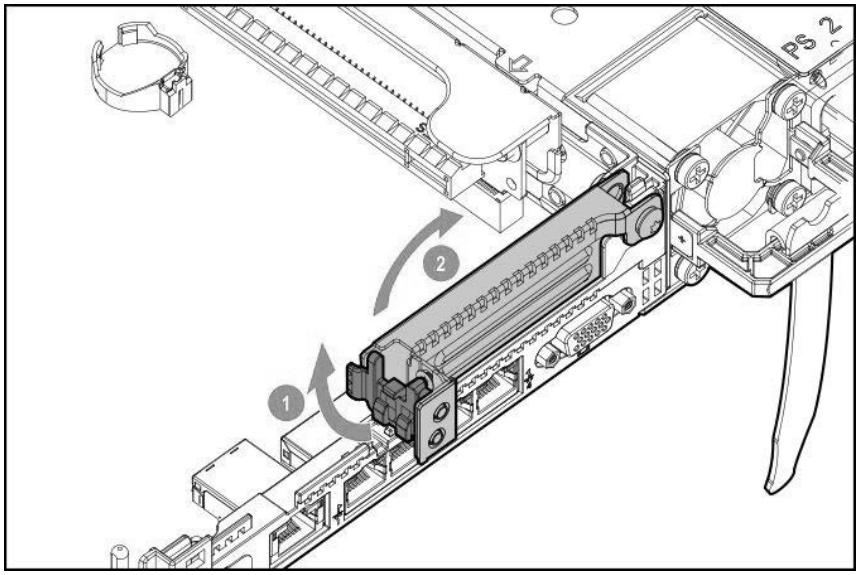

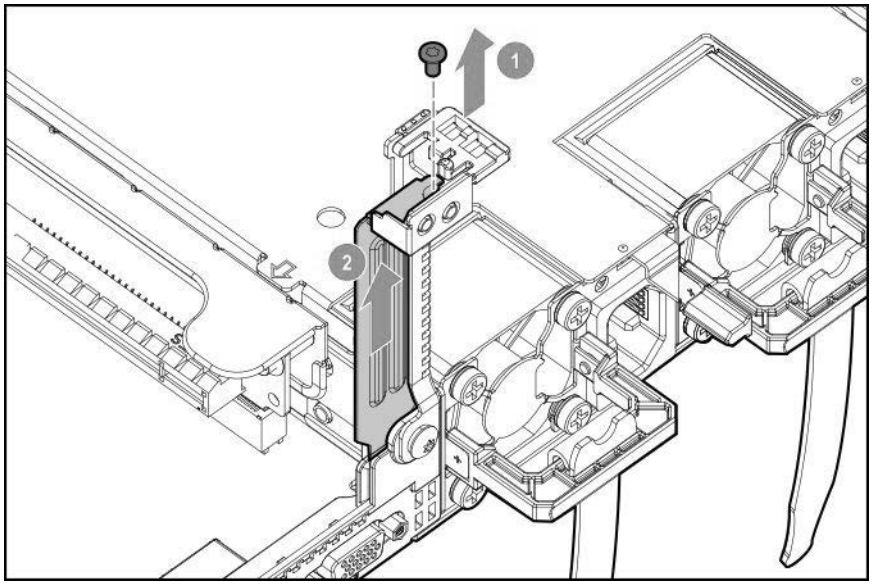

- Full-length

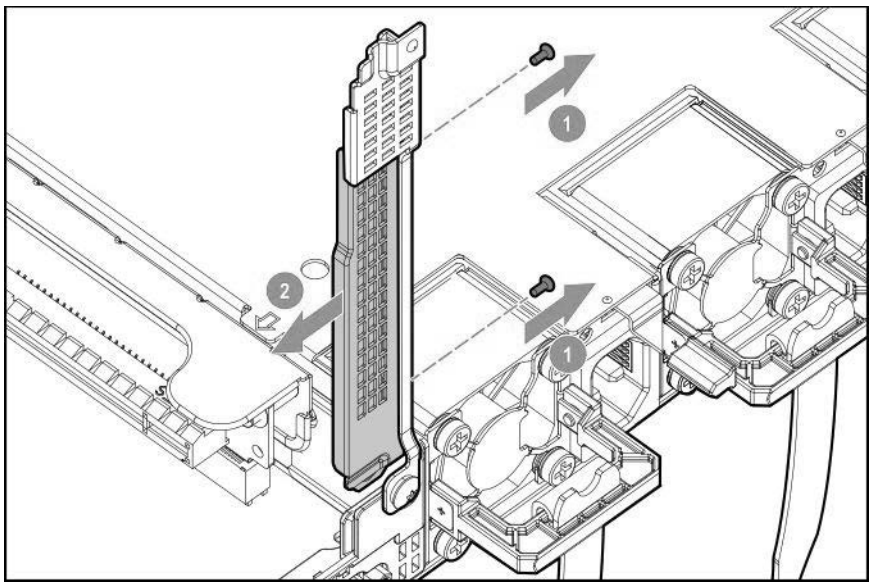

9. Install the expansion board.

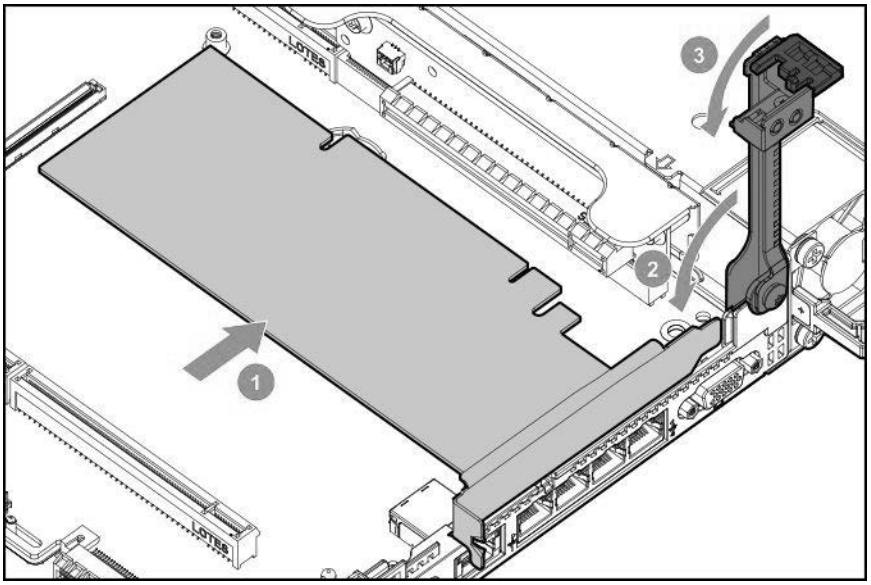

10. Connect any required internal or external cables to the expansion board.
11. Install the access panel (**Install the access panel**).
12. Install the server in the rack.
13. Connect each power cord to the server.
14. Connect each power cord to the power source.
15. **Power up the server**.

Installing an accelerator or GPU in the secondary riser cage

Use these instructions to install accelerator options, including GPUs, in the server.

Prerequisites

When installing a 3/4-length GPU, a low profile type -a controller must be installed.

Before installing this option, do the following:

- Be sure that the power supplies support the installation of this option. For more information, contact customer support.
- Be sure that you have the following items:
  - The components included with the GPU enablement option kit
  - T-15 Torx screwdriver

Procedure

1. Observe the following alerts:

WARNING: To reduce the risk of personal injury from hot surfaces, allow the drives and the internal system components to cool before touching them.

CAUTION: To prevent damage to electrical components, properly ground the server before beginning any installation procedure. Improper grounding can cause electrostatic discharge.

2. Back up all server data.
3. Power down the server (**Power down the server**).
4. Remove all power:
   a. Disconnect each power cord from the power source.
   b. Disconnect each power cord from the server.
5. Do one of the following:
   a. Extend the server from the rack (**Extend the server from the rack**).
   b. Remove the server from the rack (**Remove the server from the rack**).
6. Remove the access panel (**Remove the access panel**).
7. If installed, remove the low profile riser cage.

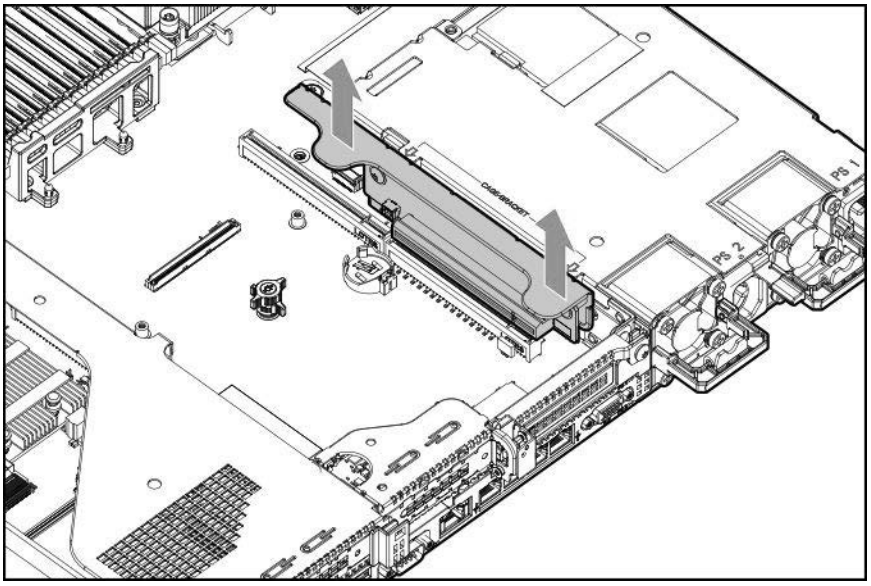

8. Install the secondary full-height PCI riser cage (**Installing a secondary full-height PCI riser cage option**).
9. Remove the existing rear guide bracket from the card, if installed.
10. If installing a 3/4-length GPU, install the bracket supplied in the kit. A T-15 Torx screwdriver is required to install the bracket.

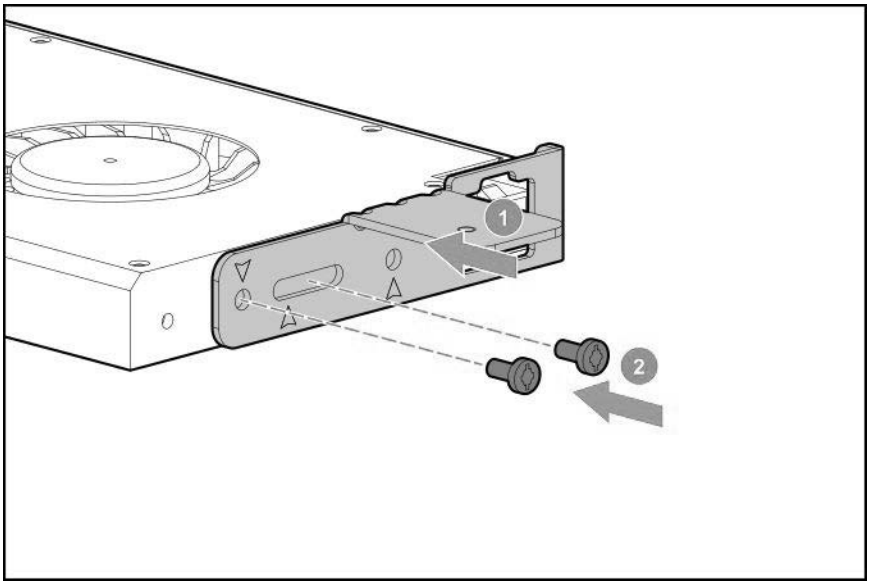

11. Install the card in the riser cage, and then connect any required cables, if applicable.
12. If installing a GPU requiring greater than 75 W, connect the power cable to the primary riser power connector.

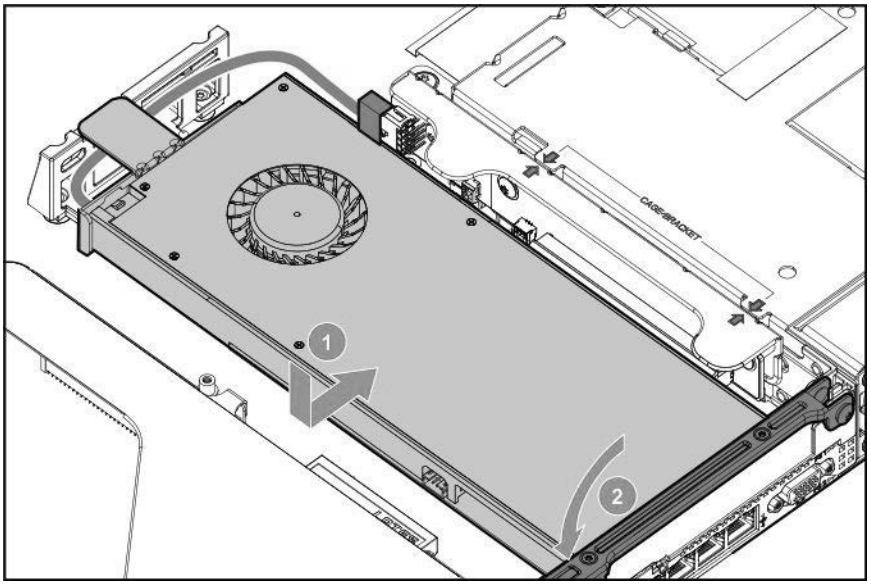

13. Install the access panel (**Install the access panel**).
14. Install the server in the rack.
15. Connect each power cord to the server.
16. Connect each power cord to the power source.
17. Power up the server (**Power up the server**).

Smart array controller options

Installing a smart array P408i-a SR controller option

Prerequisites

Before installing this option, be sure that you have the following:

- The components included with the hardware option kit
- T-15 Torx screwdriver

Procedure

1. Observe the following alerts:

   WARNING: To reduce the risk of personal injury from hot surfaces, allow the drives and the internal system components to cool before touching them.

   CAUTION: To prevent damage to electrical components, properly ground the server before beginning any installation procedure. Improper grounding can cause electrostatic discharge.

2. Back up all server data.
3. Power down the server (**Power down the server**).
4. Remove all power:
   a. Disconnect each power cord from the power source.
   b. Disconnect each power cord from the server.
5. Do one of the following:
   a. Extend the server from the rack (**Extend the server from the rack**).
   b. Remove the server from the rack (**Remove the server from the rack**).
6. Remove the access panel (**Remove the access panel**).
7. Install the controller.

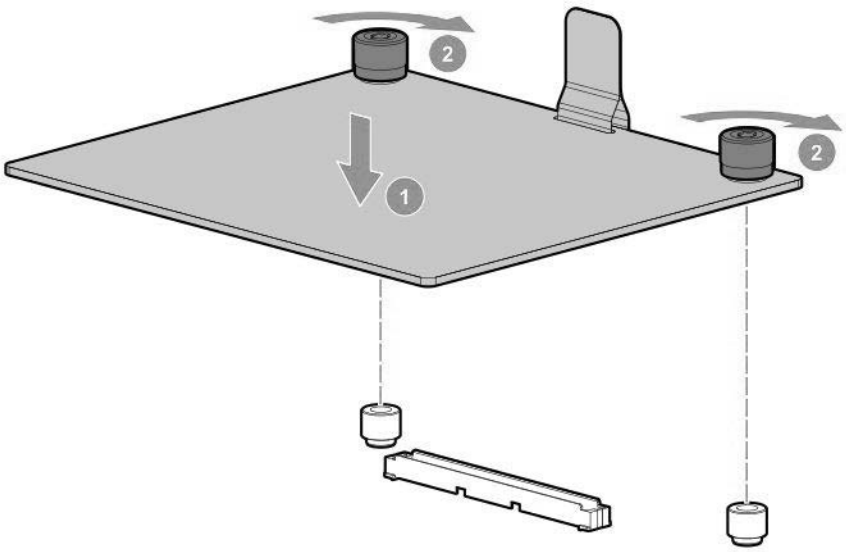

8. Connect the cables.

Additional cabling options are available. For more information, contact customer support.

- 8 SFF

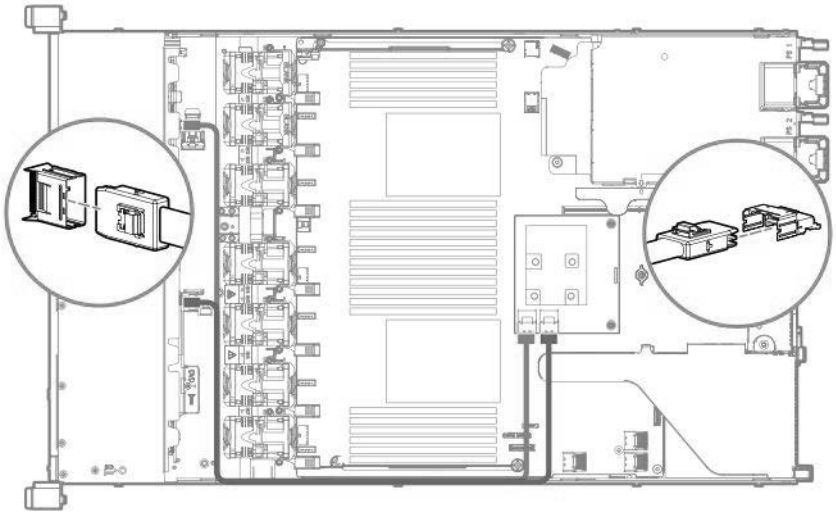

- 10 SFF SAS/SATA NVMe Combo

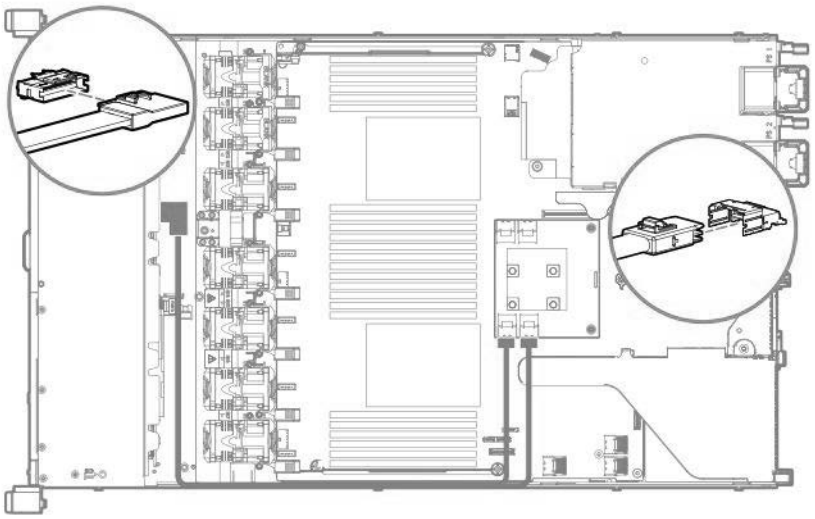

- 4 LFF

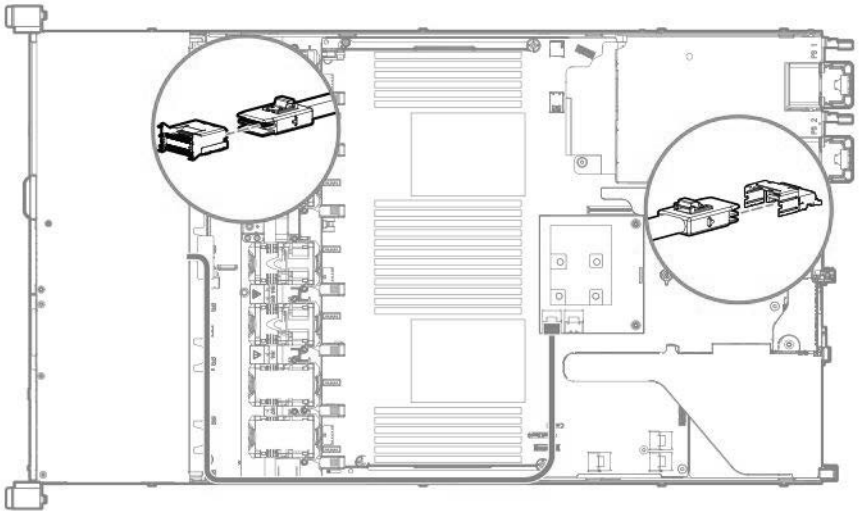

IMPORTANT: To enable SmartCache or CacheCade in a P-class type-p smart array controller, you must:

- Connect the controller backup power cable to the controller backup power connector on the system or riser board.
- Connect the energy pack cable to the energy pack connector on the system board.

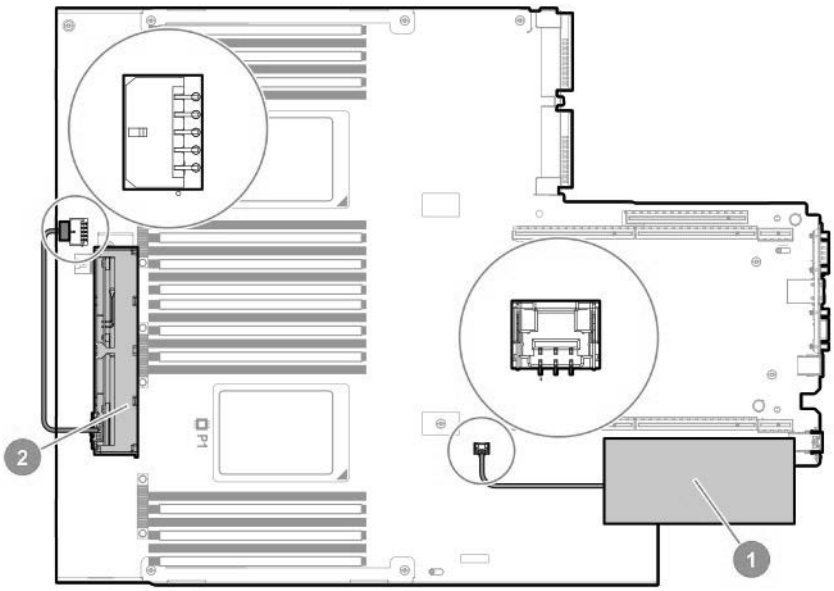

9. Install the access panel (**Install the access panel**).
10. Install the server in the rack.
11. Connect each power cord to the server.
12. Connect each power cord to the power source.
13. Power up the server (**Power up the server**).

Installing a smart array P408i-p SR controller option

Prerequisites

Before installing this option, be sure you that have the following:

- The components included with the hardware option kit
- T-10 Torx screwdriver

Procedure

1. Observe the following alerts:

   WARNING: To reduce the risk of personal injury from hot surfaces, allow the drives and the internal system components to cool before touching them.

   CAUTION: To prevent damage to electrical components, properly ground the server before beginning any installation procedure. Improper grounding can cause electrostatic discharge.

2. Back up all server data.
3. Power down the server (**Power down the server**).
4. Remove all power:

a. Disconnect each power cord from the power source.

b. Disconnect each power cord from the server.

5. Do one of the following:

   a. Extend the server from the rack (**Extend the server from the rack**).

   b. Remove the server from the rack (**Remove the server from the rack**).

6. Remove the access panel (**Remove the access panel**).

7. **Remove the primary PCI riser cage**.

8. Remove the slot 2 expansion board blank.

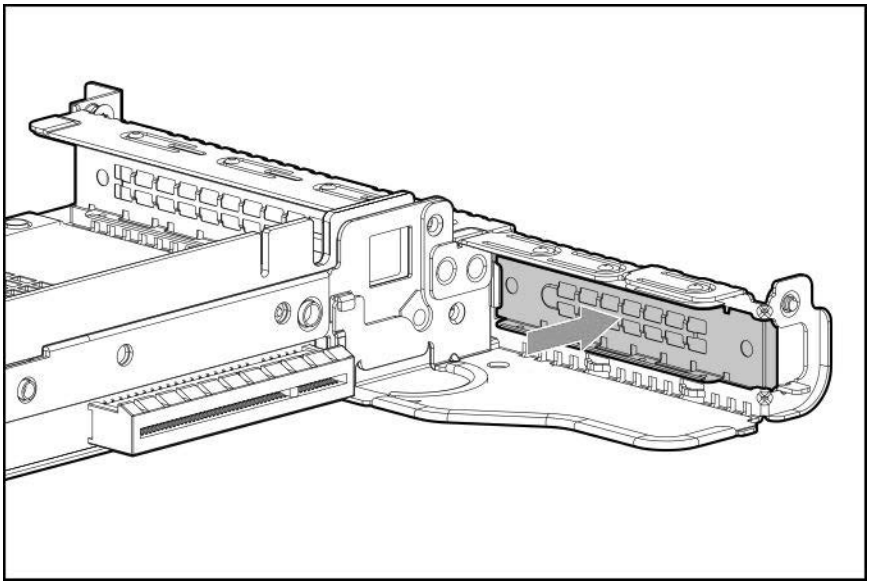

9. Use a Torx T-10 screwdriver to install the controller. The controller can also be installed in slot 1.

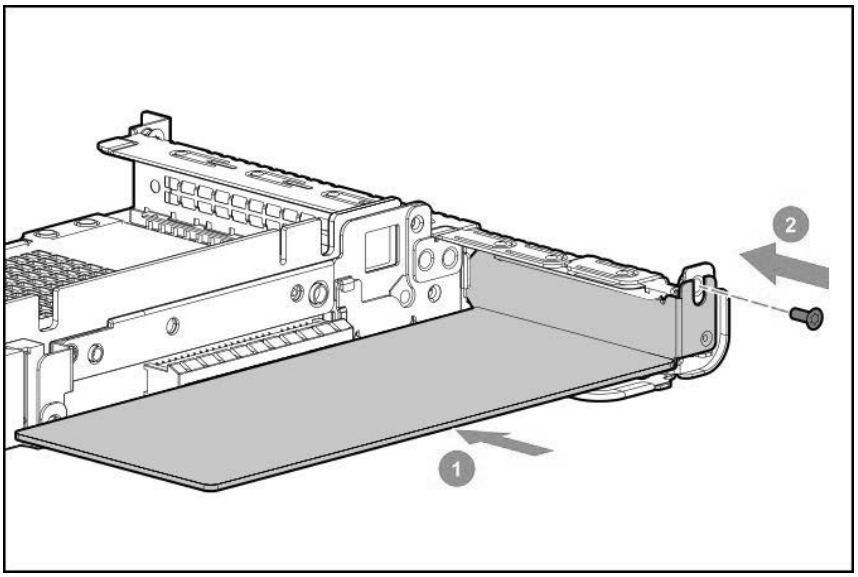

10. Install the primary PCI riser cage (**Install the primary PCI riser cage**).

11. Connect the cables.

    Additional cabling options are available. For more information, contact customer support.

    - 8 SFF

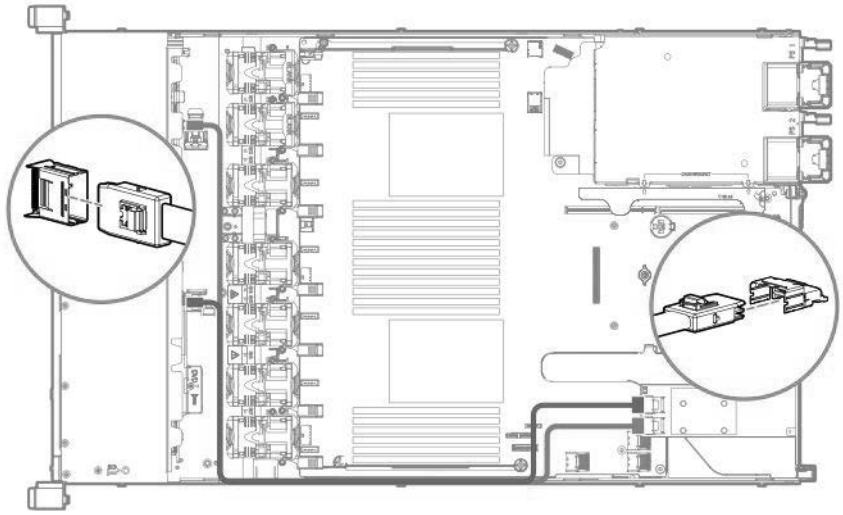

    - 4 LFF

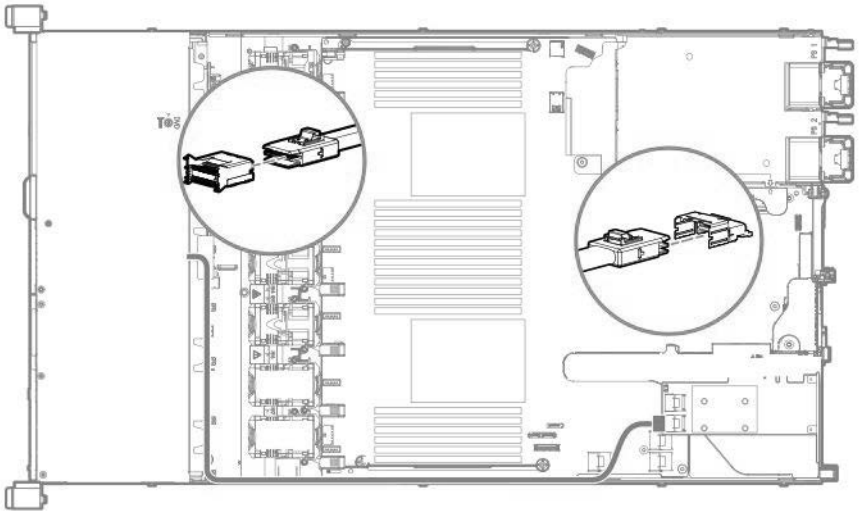

IMPORTANT: To enable SmartCache or CacheCade in a P-class type-p smart array controller, you must:

- Connect the controller backup power cable to the controller backup power connector on the system or riser board.
- Connect the energy pack cable to the energy pack connector on the system board.

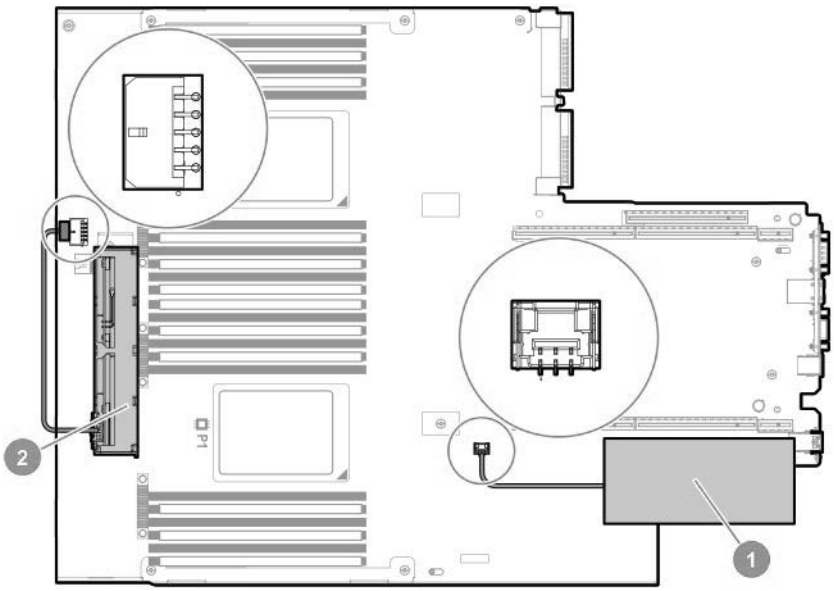

12. Install the access panel (**Install the access panel**).
13. Install the server in the rack.
14. Connect each power cord to the server.
15. Connect each power cord to the power source.
16. Power up the server (**Power up the server**).

Installing a smart array P816i-a SR controller option

Prerequisites

Before installing this option, be sure that you have the following:

- The components included with the hardware option kit
- Additional cables, as required. For more information, see **Cabling**
- T-15 Torx screwdriver

Procedure

1. Observe the following alerts:

   WARNING: To reduce the risk of personal injury from hot surfaces, allow the drives and the internal system components to cool before touching them.

   CAUTION: To prevent damage to electrical components, properly ground the server before beginning any installation procedure. Improper grounding can cause electrostatic discharge.

2. Back up all server data.
3. Power down the server (**Power down the server**).

4. Remove all power:

   a. Disconnect each power cord from the power source.

   b. Disconnect each power cord from the server.

5. Do one of the following:

   a. Extend the server from the rack (**Extend the server from the rack**).

   b. Remove the server from the rack (**Remove the server from the rack**).

6. Remove the access panel (**Remove the access panel**).

7. Install the controller.

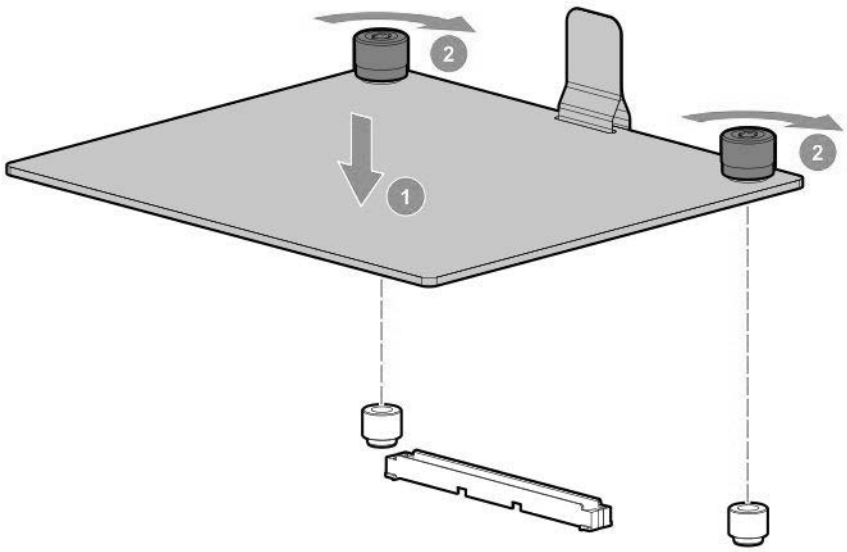

8. Connect the cables.

   The following illustration shows the 8+2 SFF backplane configuration connected to the controller. Additional cabling options are available. For more information, contact customer support.

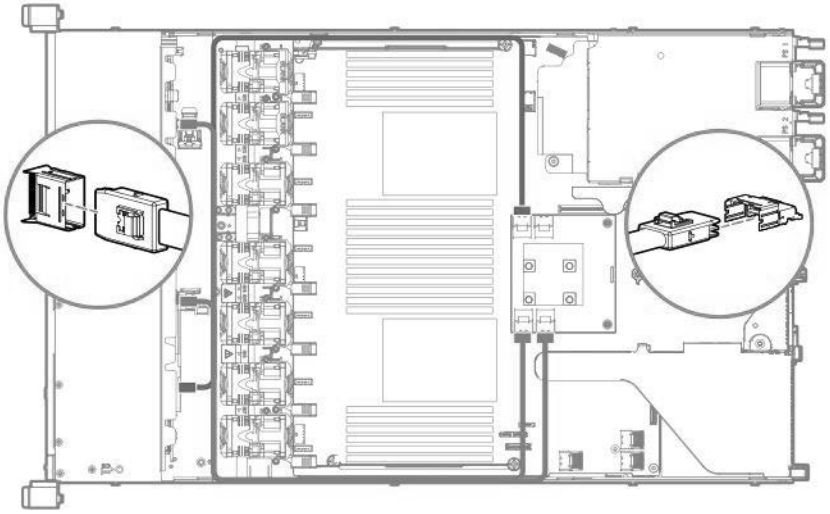

IMPORTANT: To enable SmartCache or CacheCade in a P-class type-p smart array controller, you must:

- Connect the controller backup power cable to the controller backup power connector on the system or riser board.
- Connect the energy pack cable to the energy pack connector on the system board.

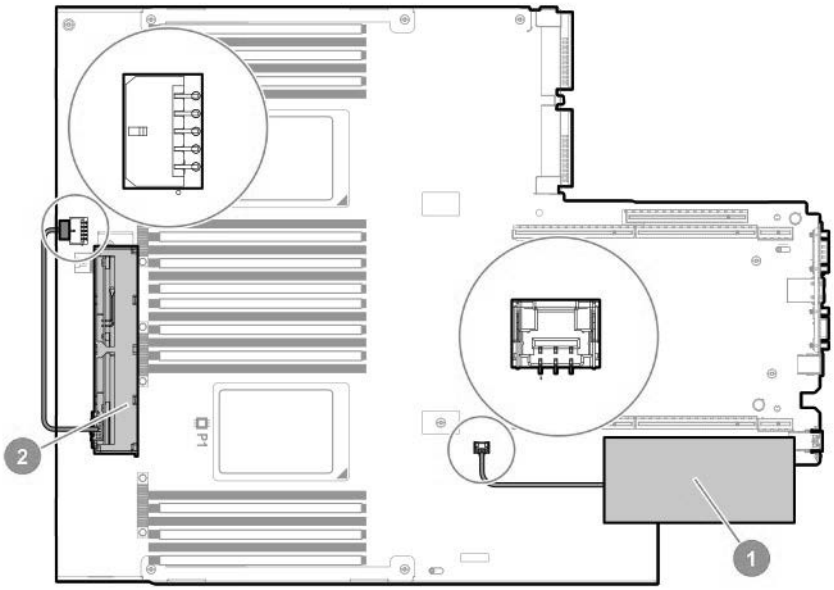

9. Install the access panel (**Install the access panel**).
10. Install the server in the rack.
11. Connect each power cord to the server.
12. Connect each power cord to the power source.
13. Power up the server (**Power up the server**).

Installing a smart array P824i-p MR controller in a configured server

Procedure

1. Back up data on the system.
2. Close all applications.
3. Update the server firmware if it is not the latest revision.
4. Do one of the following:
   - If the new smart array is the new boot device, install the device drivers.
   - If the new smart array is not the new boot device, go to the next step.

   NOTE: If the logical drive is used in a smart array SR controller RAID array, you are not able to boot from that device if you are attached to a smart array MR controller.
5. Ensure that users are logged off and all tasks are completed on the server.
6. Power down the server.

   CAUTION: In systems that use external data storage, be sure that the server is the first unit to be powered down and the last to be powered back up. Taking this precaution ensures that the system does not erroneously mark the drives as failed when the server is powered up.
7. Power down all peripheral devices that are attached to the server.
8. Disconnect the power cord from the power source.
9. Disconnect the power cord from the server.
10. Remove or open the access panel.

    WARNING: To reduce the risk of personal injury from hot surfaces, allow the drives and the internal system components to cool before touching them.
11. Remove the riser.
12. Select an available x8 or larger PCIe expansion slot.

    A x8 physical size slot is required, even though the slot width may be electrically x4 or x1. Hitachi Vantara recommends using a slot that is electrically x8.
13. Remove the slot cover.

    Save the retaining screw if one is present.
14. Slide the controller along the slot alignment guide, if one is present, and then press the board firmly into the expansion slot so that the contacts on the board edge are seated properly in the slot.
15. Secure the controller in place with the retaining screw. If the slot alignment guide has a latch (near the rear of the board), close the latch.
16. Connect the controller backup power cable.

IMPORTANT: To enable SmartCache or CacheCade in a P-class type-p smart array controller, you must:

- Connect the controller backup power cable to the controller backup power connector on the system or riser board.
- Connect the energy pack cable to the energy pack connector on the system board.

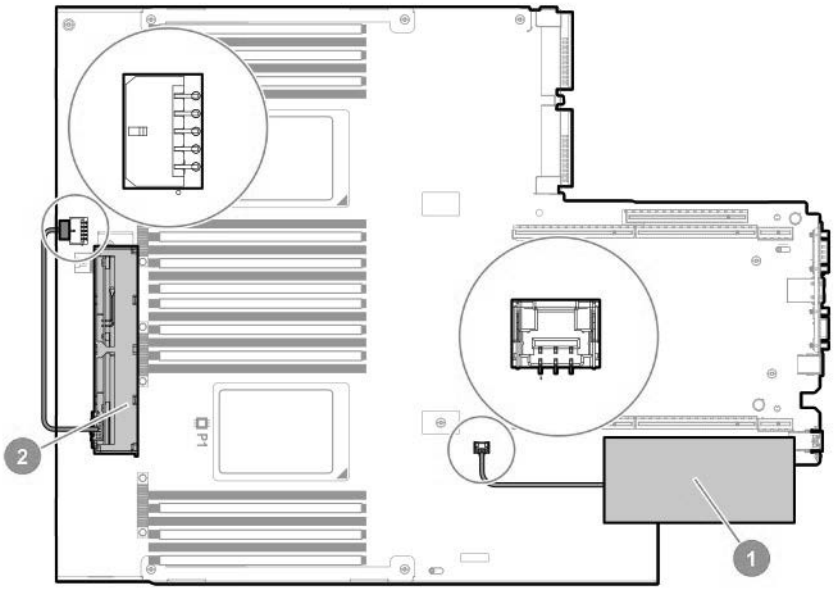

17. Connect storage devices to the controller.

    For cabling information, see the server user guide.
18. Install the Smart Storage Battery or Smart Storage Hybrid Capacitor.
19. Reinstall the riser.
20. Connect peripheral devices to the server.
21. Connect the power cord to the server.
22. Connect the power cord to the power source.
23. Power up all peripheral devices.
24. Power up the server.

Installing the operating system with the smart array MR P824i-p controller driver

Prerequisites

Ensure that you have the smart array MR P824i-p controller driver available. Obtain it by extracting it from the SPV (**https://support.hitachivantara.com/en/user/answers/downloads.html#hardware-download**) or by downloading it from the support website (**https://support.hitachivantara.com/en/user/answers/downloads.html#hardware-download**).

Procedure

1. Power on the server.
2. If you are running the server in UEFI Boot Mode, select **F9 (System Utilities)**.
3. (Optional) If running the server in Legacy Boot Mode, set the controller as the boot controller.
4. (Optional) If running the server in Legacy Boot Mode, change the controller boot order.
5. Configure a logical drive or select physical drives for JBOD mode using the smart array configuration utility in UEFI System Utilities.
6. Launch the operating system installation and point to the controller driver when prompted.
7. If the operating system utility does not see the drive, repeat the step to configure the logical drive or select physical drives for JBOD and retry the installation.
8. After the installation is complete, use MR Storage Administrator, StorCLI, or the SPV to update the controller firmware if it is not the latest revision.

Processor and heatsink options

Installing a processor heatsink assembly

The server supports single-processor and dual processor operations.

IMPORTANT: Existing Hitachi Advanced Server products containing first-generation Intel Xeon Scalable processors may not be upgraded to second-generation Intel Xeon Scalable processors at this time.

Hitachi Vantara recommends identifying the processor heatsink module components before performing this procedure. See **Processor, heatsink, and socket components**.

Prerequisites

Before installing this option, be sure that you have the following items:

- Processor or heatsink kit contents
- T-30 Torx screwdriver

Procedure

1. Observe the following alerts.

   CAUTION: When handling the heatsink, always hold it along the top and bottom of the fins. Holding it from the sides can damage the fins.

   CAUTION: To prevent possible server malfunction and damage to the equipment, multiprocessor configurations must contain processors with the same part number.

   CAUTION: If installing a processor with a faster speed, update the system ROM before installing the processor.

   To download firmware and view installation instructions, see **https://support.hitachivantara.com/en/user/answers/downloads.html#hardware-download**.

CAUTION: THE CONTACTS ARE VERY FRAGILE AND EASILY DAMAGED. To avoid damage to the socket or processor, do not touch the contacts.

2. Power down the server (**Power down the server**).
3. Remove all power:
   a. Disconnect each power cord from the power source.
   b. Disconnect each power cord from the server.
4. Remove the server from the rack (**Remove the server from the rack**).
5. Remove the access panel (**Remove the access panel**).
6. Remove the dust cover from the processor socket you intend to upgrade.
7. Install the processor heatsink assembly:
   a. Locate and align the Pin 1 indicator on the processor carrier and the socket.
   b. Align the processor-heatsink module with the heatsink alignment pins and gently lower it down until it sits evenly on the socket.

   The heatsink alignment pins are keyed. The processor will only install one way. Your heatsink may look different than the one shown.

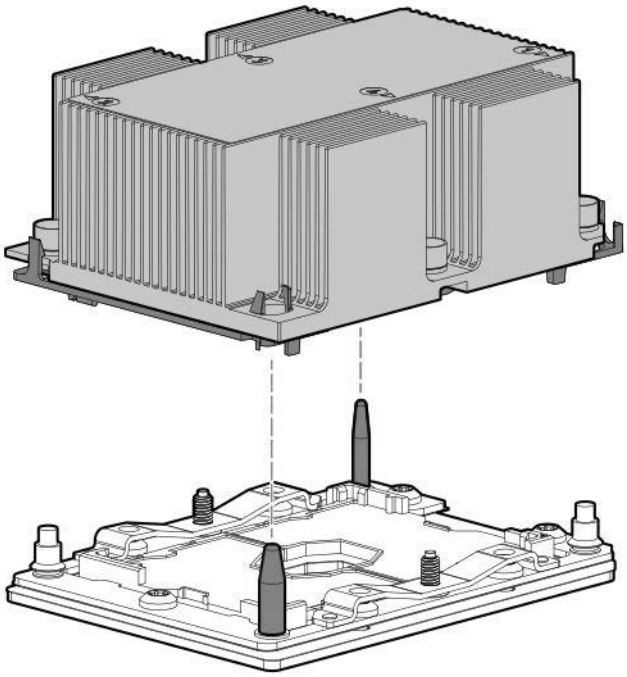

CAUTION: Be sure to tighten each heatsink nut fully in the order indicated. Otherwise, boot failure or intermittent shutdowns might occur.

   c. Using a T-30 Torx screwdriver, fully tighten each heatsink nut in the order indicated on the heatsink label (1 -2-3 -4) until it no longer turns.

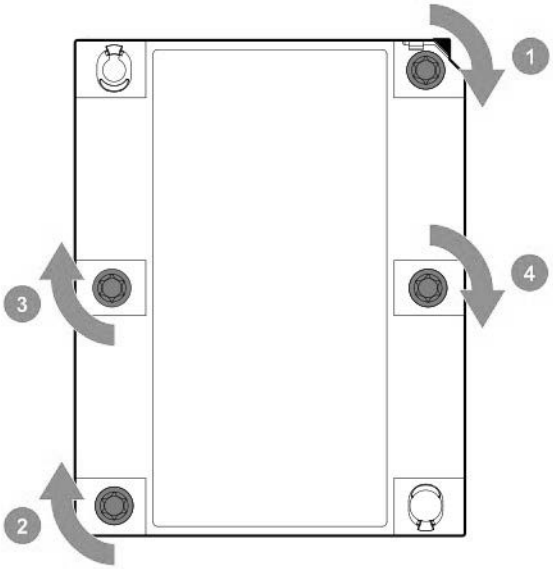

8. If installing a second processor, install high-performance fans in bays 7 and 8. These fans are provided with the processor option kit.
9. Install the access panel (**Install the access panel**).
10. Install the server in the rack.
11. Connect each power cord to the server.
12. Connect each power cord to the power source.
13. Power up the server (**Power up the server**).

Installing a high-performance heatsink

Prerequisites

CAUTION: Installing a high-performance heatsink requires the installation of a processor assembly onto the heatsink. To avoid damage to server or components, do not remove or install the processor assembly when installing or replacing other heatsinks.

Before installing this option, be sure that you have the following:

- The components included with the hardware option kit
- T-30 Torx screwdriver
- 1/4" flat blade screwdriver or nonconductive tool

  Hitachi Vantara recommends using a nonconductive tool.

Procedure

1. Observe the following alerts.

CAUTION: The processor assembly must be removed and replaced as a unit. Do not remove the processor from the carrier.

CAUTION: When handling the heatsink, always hold it along the top and bottom of the fins. Holding it from the sides can damage the fins.

CAUTION: THE CONTACTS ARE VERY FRAGILE AND EASILY DAMAGED. To avoid damage to the socket or processor, do not touch the contacts.

2. Power down the server (**Power down the server**).
3. Remove all power:
   a. Disconnect each power cord from the power source.
   b. Disconnect each power cord from the server.
4. Do one of the following:
   a. Extend the server from the rack (**Extend the server from the rack**).
   b. Remove the server from the rack (**Remove the server from the rack**).
5. Remove the access panel (**Remove the access panel**).
6. Observe the following cautions.

   CAUTION: Be sure to loosen each heatsink nut in the order indicated. Otherwise, damage might occur to the heatsink or processor.

   CAUTION: Install the processor heatsink assembly as soon as possible after removing it. Do not leave the processor socket unpopulated for extended periods of time.

7. Remove the existing processor heatsink assembly:
   a. Allow the heatsink to cool.
   b. Using a T-30 Torx screwdriver, loosen the heatsink nuts.

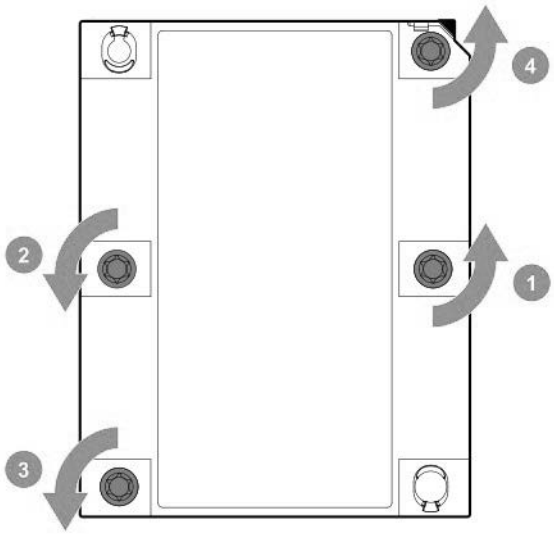

c. Lift the processor heatsink assembly up and away from the system board.

d. Turn the processor heatsink assembly over and place it on a work surface with the processor assembly facing up.

8. Release the thermal grease adhesion between the processor assembly and heatsink:

a. Locate the TIM (thermal interface media) breaker slot between the processor assembly and heatsink. The slot is across from the Pin 1 indicator, near the corner.

b. Insert a 1/4" flat blade screwdriver or nonconductive tool into the slot.

> **CAUTION:** To avoid damage to the processor, insert the tool between the processor and the heatsink base. The opening in the carrier provides access to a gap between the processor heatsink spreader and the heatsink base.

c. To release the adhesion of the thermal grease, gently rotate the tool.

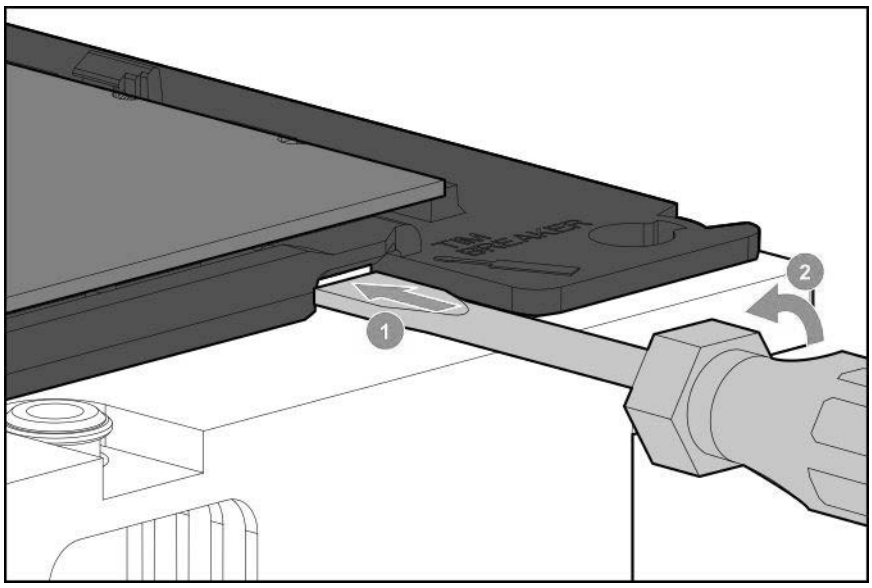

d. Unlatch the remaining corners of the processor assembly.

e. Separate the processor assembly from the heatsink.

The processor remains attached to the carrier.

9. Using an alcohol wipe, remove the existing thermal grease from the processor and heatsink. Allow the alcohol to evaporate before continuing.

10. Remove the plastic cover over the thermal grease on the high-performance heatsink.

11. Install the processor assembly on the heatsink.

Align the Pin 1 indicator on the processor to the Pin 1 indicator on the heatsink, and then latch the processor assembly to the heatsink.

Your heatsink may look different than the one shown.

12. Install the processor heatsink assembly:

a. Locate the Pin 1 indicator on the processor carrier and the socket.

b. Align the processor heatsink assembly with the heatsink alignment pins and gently lower it down until it sits evenly on the socket.

The heatsink alignment pins are keyed. The processor heatsink assembly will only install one way.

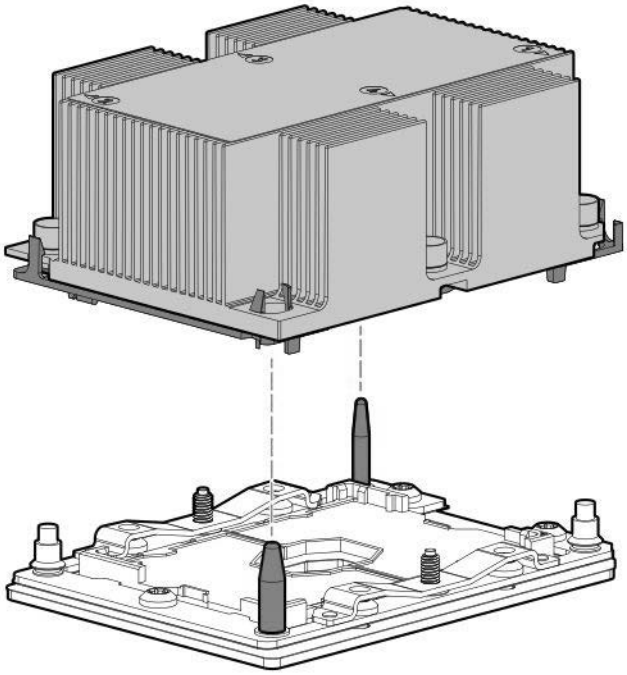

c. **CAUTION:** Be sure to tighten each heatsink nut fully in the order indicated. Otherwise, boot failure or intermittent shutdowns might occur.

Using a T-30 Torx screwdriver, fully tighten each heatsink nut until it no longer turns.

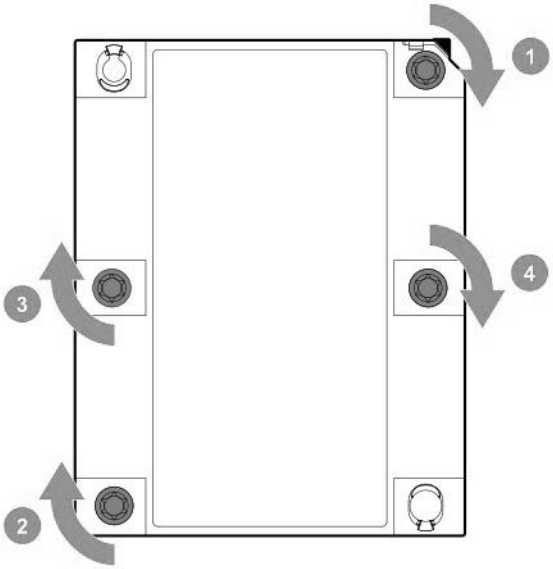

Processor, heatsink, and socket components

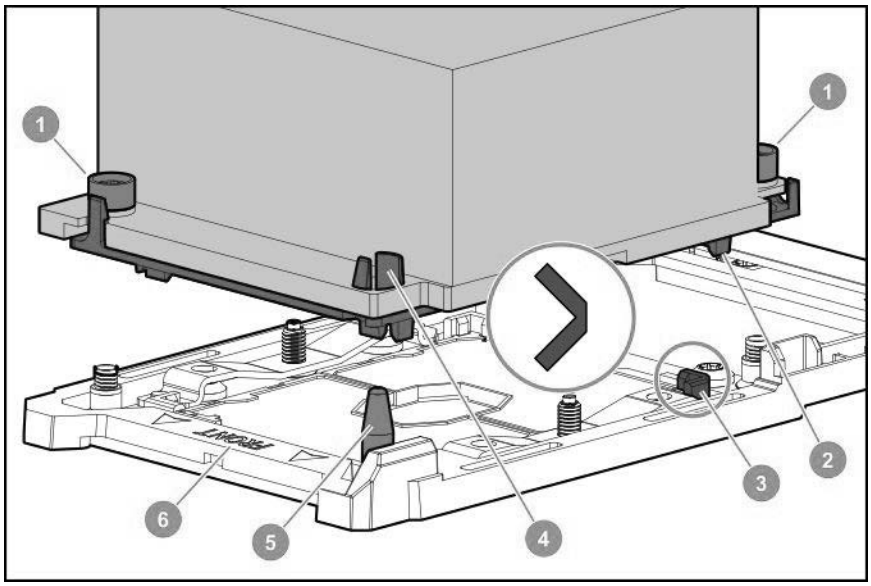

Item	Description
1	Heatsink nuts
2	Processor carrier
3	Pin 1 indicator [1]
4	Heatsink guide/keying feature
5	Alignment post
6	Heatsink keying frame

[1] Symbol also on the processor and frame.

Installing the Systems Insight Display power module

Prerequisites

Before installing this option, be sure you have the following:

- The components included with the hardware option kit
- T-10 Torx screwdriver

Procedure

1. Observe the following alerts:

   WARNING: To reduce the risk of personal injury from hot surfaces, allow the drives and the internal system components to cool before touching them.

   CAUTION: To prevent damage to electrical components, properly ground the server before beginning any installation procedure. Improper grounding can cause electrostatic discharge.

2. Back up all server data.
3. Power down the server (**Power down the server**).
4. Remove all power:
   a. Disconnect each power cord from the power source.
   b. Disconnect each power cord from the server.
5. Do one of the following:
   a. Extend the server from the rack (**Extend the server from the rack**).
   b. Remove the server from the rack (**Remove the server from the rack**).
6. Remove the access panel (**Remove the access panel**).
7. Disconnect the Power/UID/USB cable from the front power button/USB 3.0 on the system board.

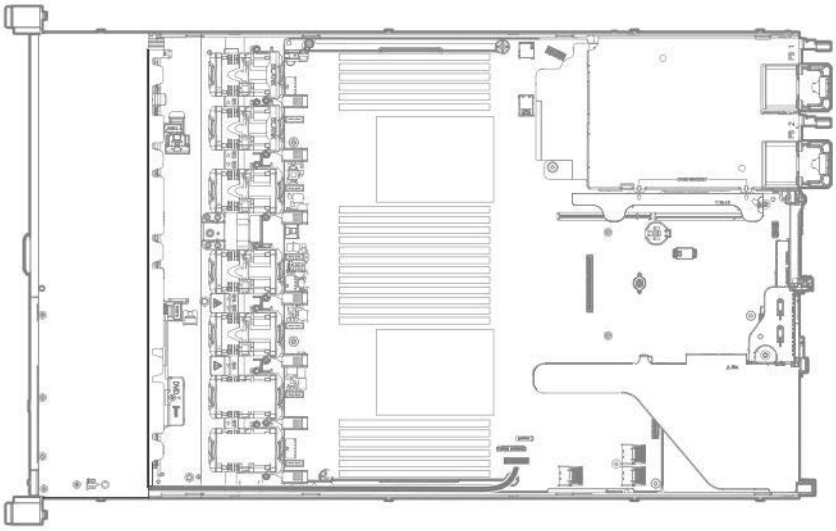

8. Using a Torx T-10 screwdriver, remove the Power/UID/USB assembly.

- 8 SFF

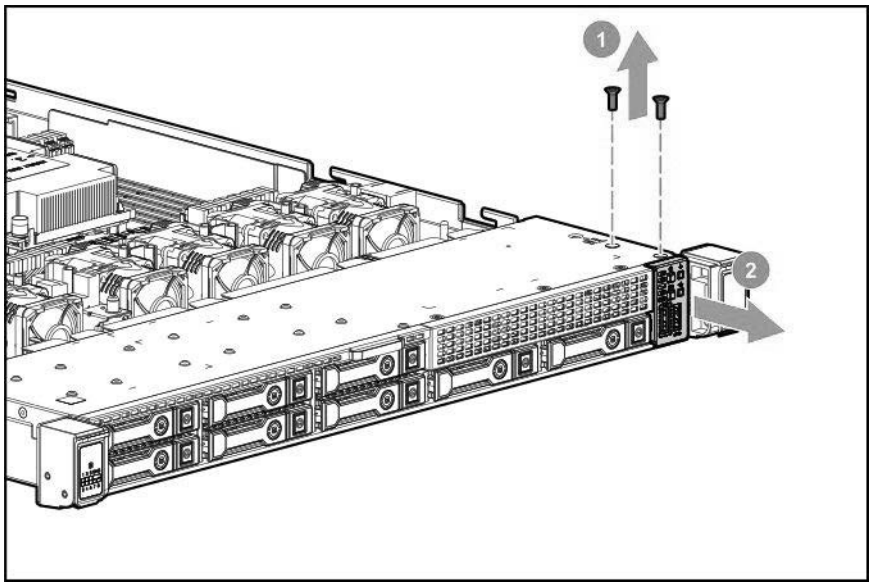

- 4 LFF

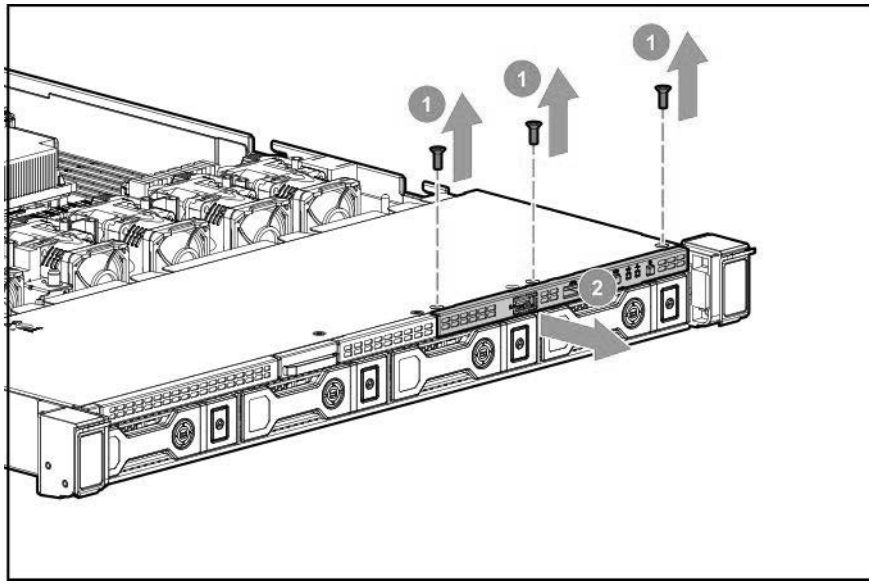

9. Guide the SID cable through the front of the server.

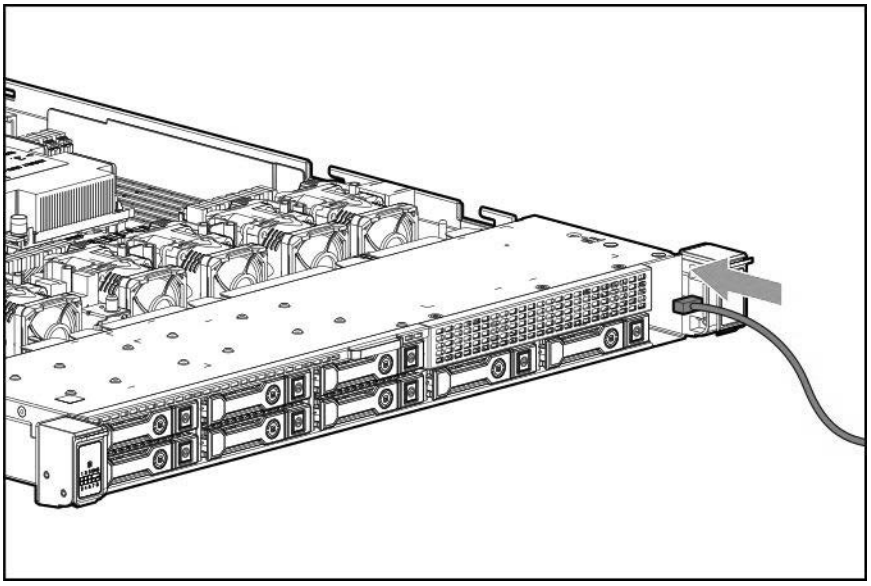

10. Install the SID module into the front panel. Using a T-10 Torx screwdriver, secure the module to the chassis with the screws from the kit.

- 8 SFF

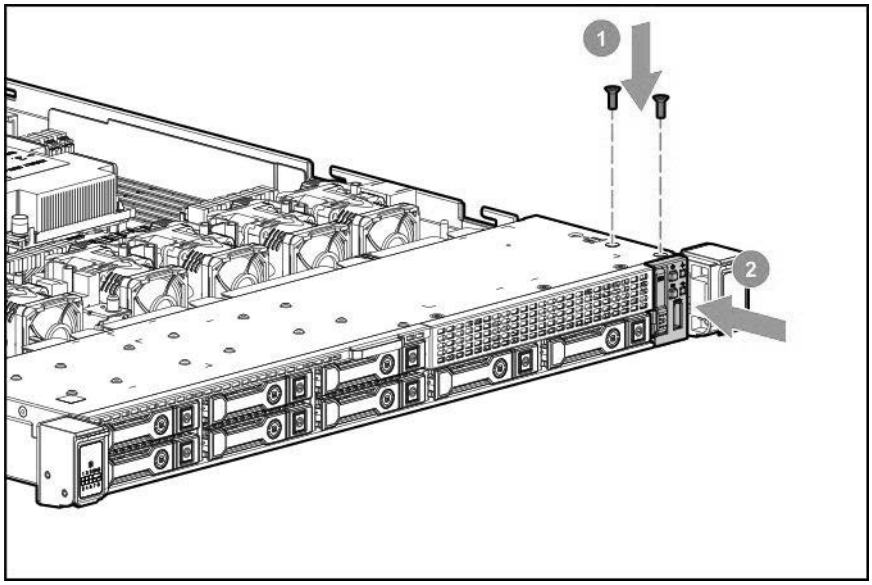

- 4 LFF

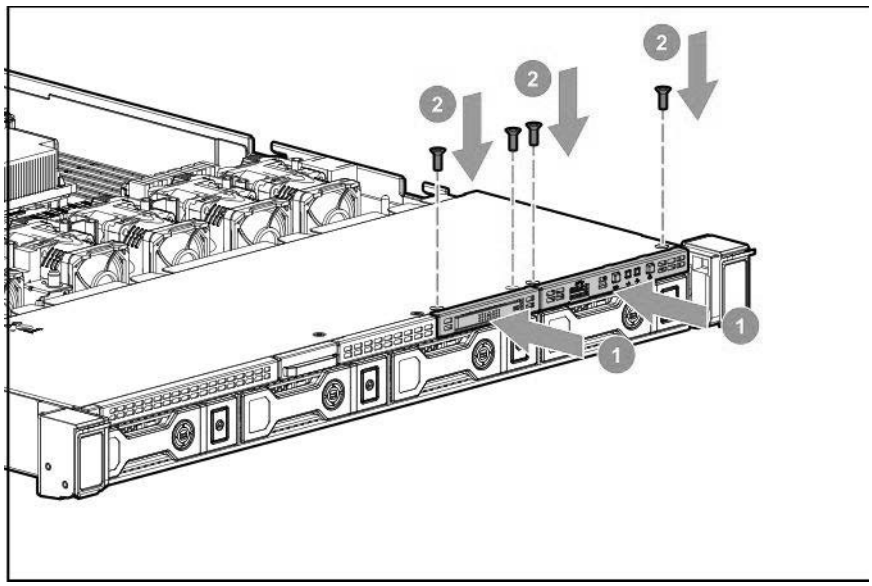

11. Connect the SID cables to the front power button/USB 3.0 connector on the system board.

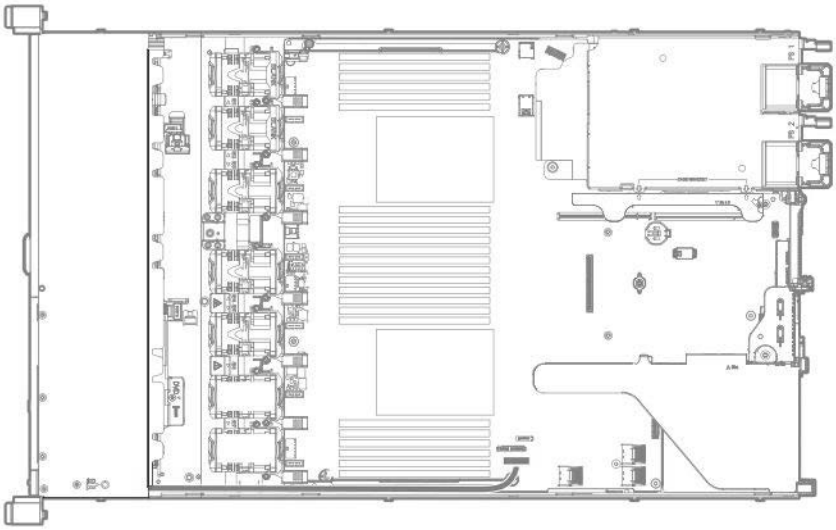

Installing the 4 LFF display port/USB module

Prerequisites

Before installing this option, be sure you have the following:

- The components included with the hardware option kit
- T-10 Torx screwdriver

Procedure

1. Power down the server (**Power down the server**).
2. Remove all power:
   a. Disconnect each power cord from the power source.
   b. Disconnect each power cord from the server.
3. Do one of the following:
   a. Extend the server from the rack (**Extend the server from the rack**).
   b. Remove the server from the rack (**Remove the server from the rack**).
4. Remove the access panel (**Remove the access panel**).
5. Using a Torx T-10 screwdriver, remove the 4 LFF display port/USB blank.

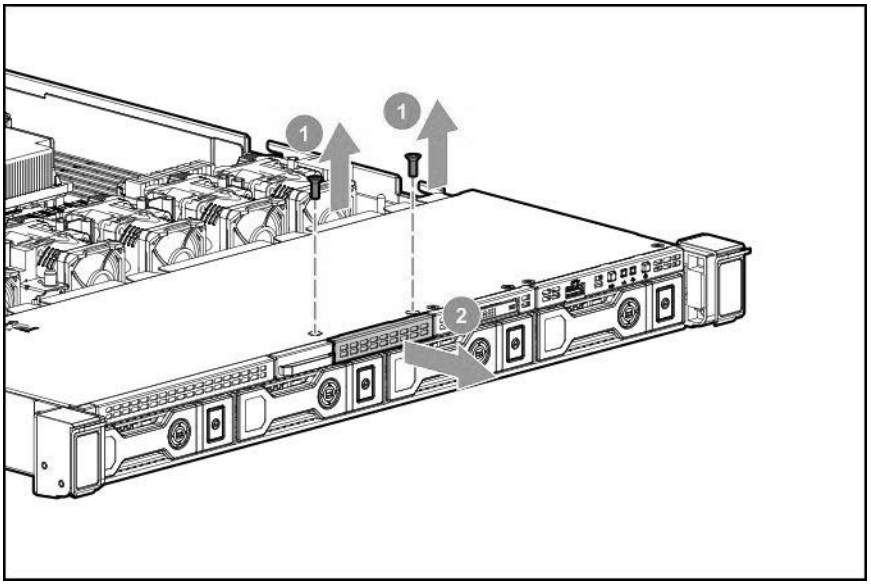

6. Install the 4 LFF display port/USB module.

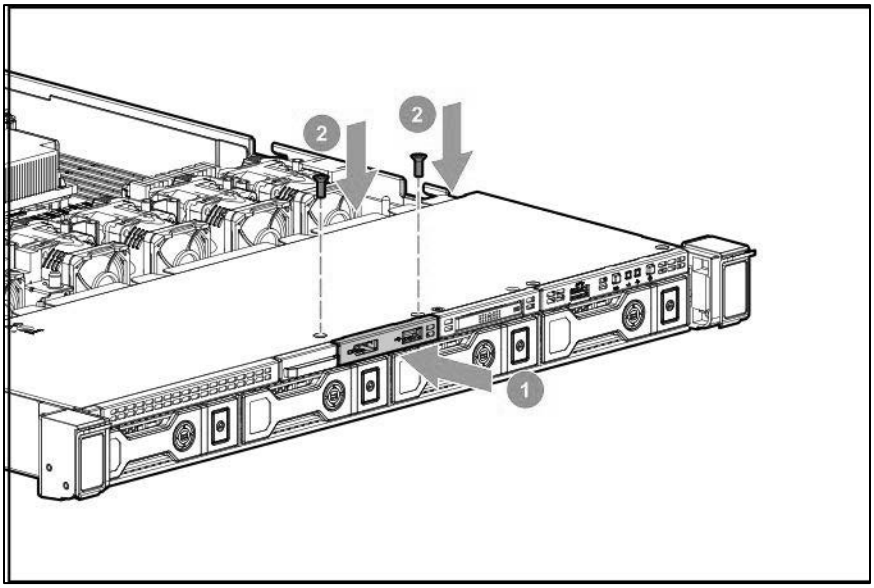

7. Route and connect the cable.

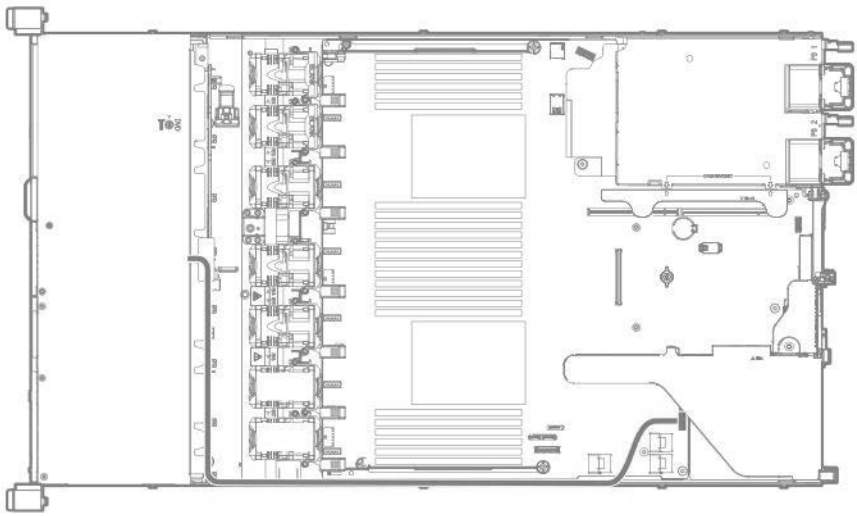

8. Install the access panel (**Install the access panel**).
9. Install the server in the rack.
10. Connect each power cord to the server.
11. Connect each power cord to the power source.
12. Power up the server (**Power up the server**).

Installing the serial cable option

Prerequisites

Before installing this option, be sure you have the following:

- The components included with the hardware option kit
- 5 mm socket

Procedure

1. Observe the following alerts:

   WARNING: To reduce the risk of personal injury from hot surfaces, allow the drives and the internal system components to cool before touching them.

   CAUTION: To prevent damage to electrical components, properly ground the server before beginning any installation procedure. Improper grounding can cause electrostatic discharge.

2. Back up all server data.
3. Power down the server (**Power down the server**).
4. Remove all power:

a. Disconnect each power cord from the power source.

b. Disconnect each power cord from the server.

5. Do one of the following:

   a. Extend the server from the rack (**Extend the server from the rack**).

   b. Remove the server from the rack (**Remove the server from the rack**).

6. Remove the access panel (**Remove the access panel**).

7. Remove the serial cable blank.

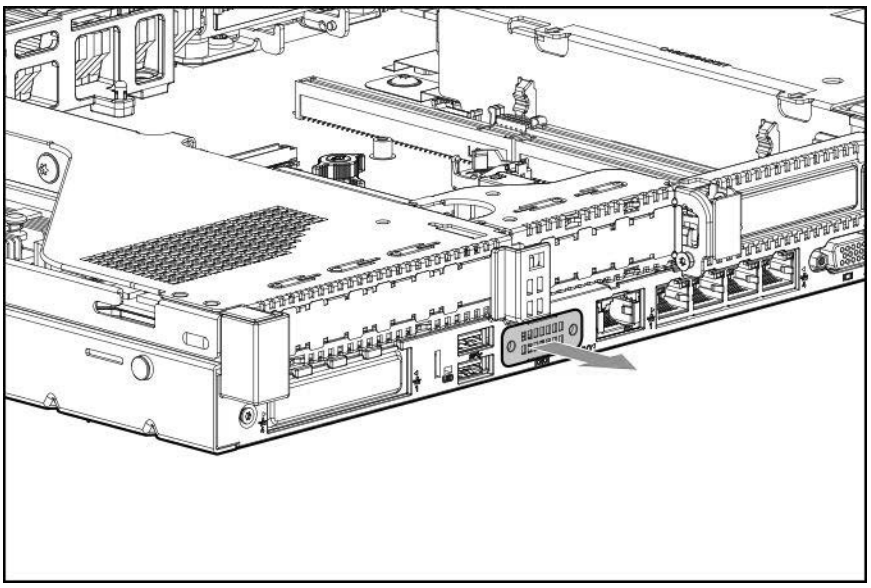

8. Connect the serial cable option, and then secure the cable with two T-10 screws. Then, remove the backing from the double-sided tape and press down where indicated.

   A 5 mm socket is required for this step.

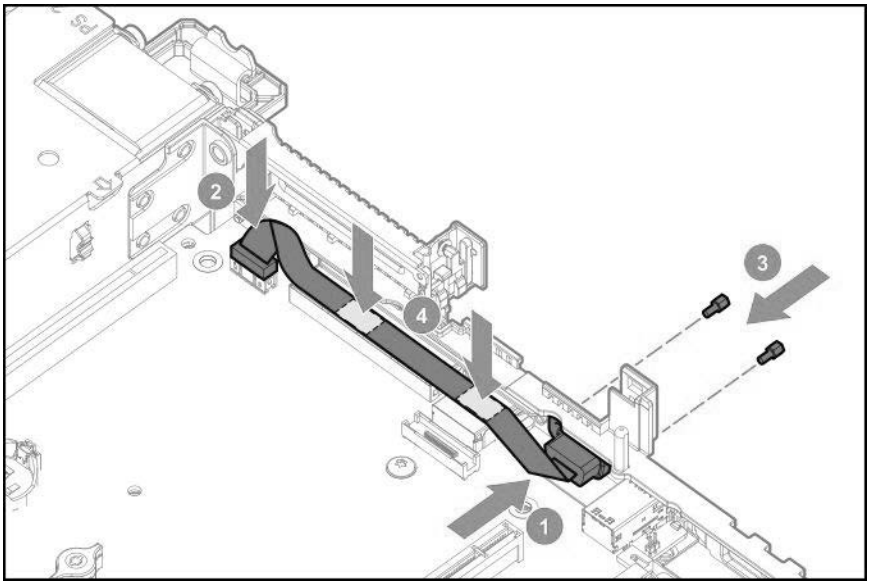

9. Install the access panel (**Install the access panel**).

10. Install the server in the rack.
11. Connect each power cord to the server.
12. Connect each power cord to the power source.
13. Power up the server (**Power up the server**).

Installing the Chassis Intrusion Detection switch option

Prerequisites

Before installing this option, be sure you have the following:

- The components included with the hardware option kit
- T-15 Torx screwdriver

Procedure

1. Power down the server (**Power down the server**).
2. Remove all power:
   a. Disconnect each power cord from the power source.
   b. Disconnect each power cord from the server.
3. Do one of the following:
   a. Extend the server from the rack (**Extend the server from the rack**).
   b. Remove the server from the rack (**Remove the server from the rack**).
4. Remove the access panel (**Remove the access panel**).
5. Use a T-15 Torx screwdriver to remove the left DIMM guard from the system board.

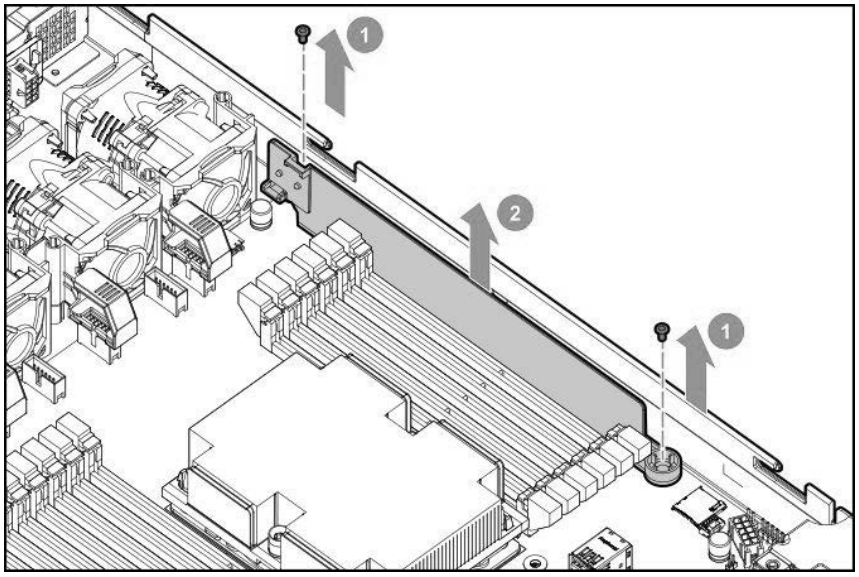

6. Assemble the connector/cable harness pin openings to the alignment pegs on the DIMM guard.

7. Install the plastic cover on the DIMM guard.

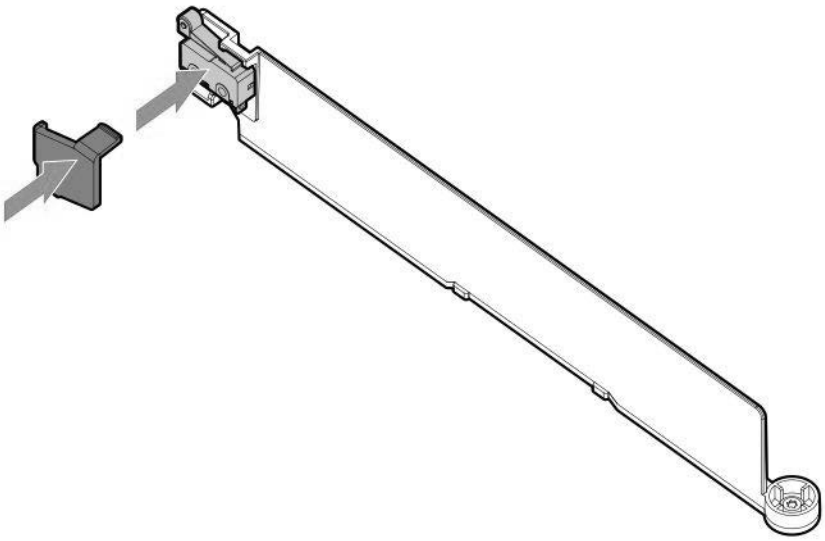

8. Use a T-15 Torx screwdriver to install the DIMM guard, and then connect the cable to the system board.

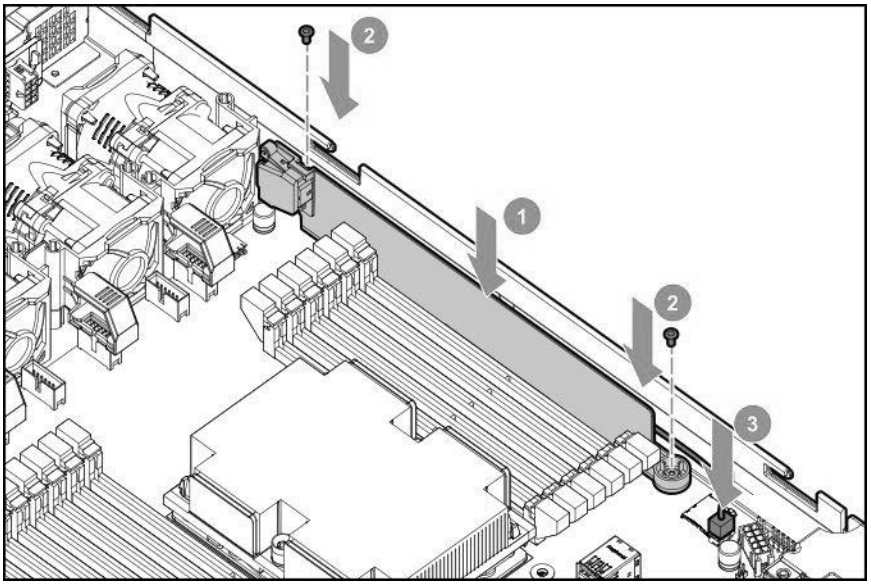

9. Install the access panel (**Install the access panel**).

10. Install the server in the rack.

11. Connect each power cord to the server.

12. Connect each power cord to the power source.

13. Power up the server (**Power up the server**).

Installing the FlexibleLOM option

Prerequisites

Before installing this option, be sure that you have the following:

- The components included with the hardware option kit
- T-10 Torx screwdriver

Procedure

1. **Power down the server**.
2. Remove all power:
   a. Disconnect each power cord from the power source.
   b. Disconnect each power cord from the server.
3. Do one of the following:
   - **Extend the server from the rack**.
   - **Remove the server from the rack**.
4. **Remove the access panel**.
5. Use a T-10 Torx screwdriver to remove the FlexibleLOM slot blank.

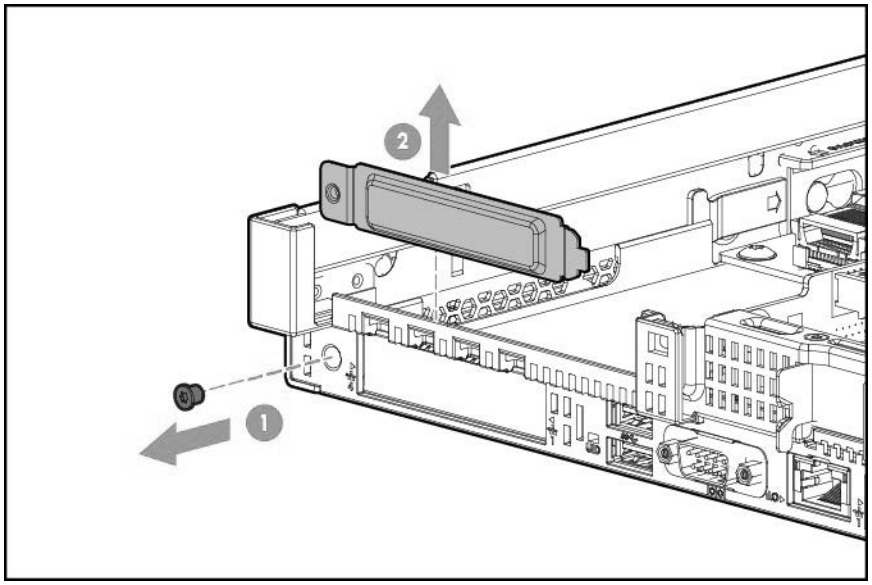

6. Install the FlexibleLOM:
   a. Firmly seat the FlexibleLOM in the slot.
   b. Tighten the thumbscrew.

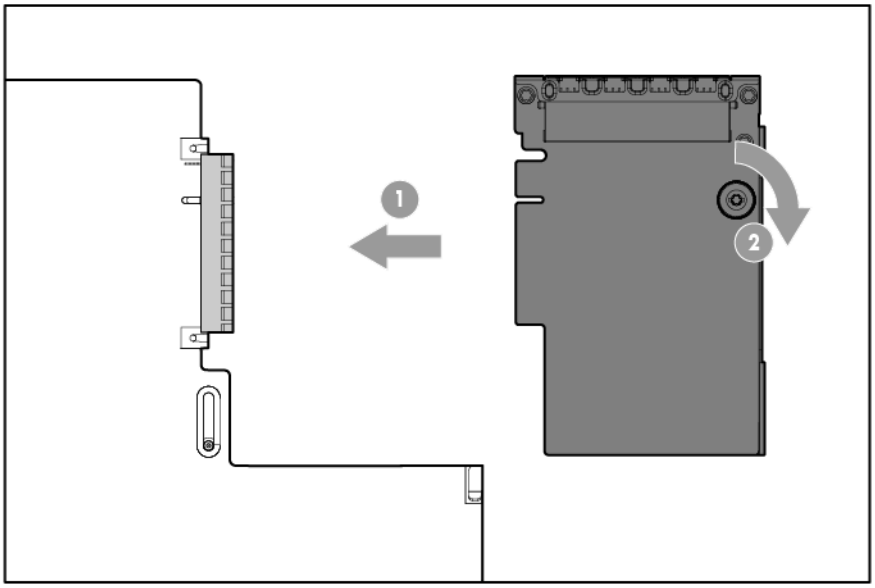

7. **Install the access panel.**
8. Slide the server into the rack.
9. Connect the LAN segment cables.
10. Connect each power cord to the server.
11. Connect each power cord to the power source.
12. Power up the server (**Power up the server**).

Energy pack options

Hitachi Vantara offers two centralized backup power source options to back up write cache content on P-class smart array controllers in case of an unplanned server power outage.

- **Smart Storage Battery**
- **Smart Storage Hybrid Capacitor**

IMPORTANT: The Smart Storage Hybrid Capacitor is only supported on HA800and later servers that support the 96W Smart Storage Battery.

One energy pack option can support multiple devices. An energy pack option is required for P-class smart array controllers. Once installed, the status of the energy pack displays in iLO. For more information, see the iLO User Guide on (**https://knowledge.hitachivantara.com/Documents/Servers**).

Smart Storage Battery

The Smart Storage Battery supports the following devices:

- Smart array SR controllers
- Smart array MR controllers
- NVDIMMs

IMPORTANT: To support NVDIMMs, the Smart Storage Battery must be installed.

A single 96W battery can support up to 24 devices.

After the battery is installed, it might take up to two hours to charge. Controller features requiring backup power are not re-enabled until the battery is capable of supporting the backup power.

This server supports the 96W Smart Storage Battery with the 145mm cable.

Smart Storage Hybrid Capacitor

The Smart Storage Hybrid Capacitor supports the following devices:

- Smart array SR controllers
- Smart array MR controllers

IMPORTANT: NVDIMMs are only supported by the Smart Storage Battery.

The capacitor pack can support up to three devices.

This server supports the Smart Storage Hybrid Capacitor with the 145mm cable.

Before installing the Smart Storage Hybrid Capacitor, verify that the system BIOS meets the minimum firmware requirements to support the capacitor pack.

IMPORTANT: If the system BIOS or controller firmware is older than the minimum recommended firmware versions, the capacitor pack will only support one device.

The capacitor pack is fully charged after the system boots.

Minimum firmware versions

Product	Minimum firmware version
Hitachi Advanced Server HA810 system ROM	2.00
Smart array SR controllers	1.90
Smart array MR controllers	24.23.0-0041

Energy pack option configurations

In the Hitachi Advanced Server HA810, an energy pack can be installed in two different orientations, depending on configuration:

- **Installing an energy pack in 8 SFF and 4 LFF configurations**
- **Installing an energy pack in the 10 SFF SAS/SATA/NVMe Combo backplane configuration**

Installing an energy pack in the 10 SFF SAS/SATA/NVMe Combo backplane configuration

Prerequisites

The energy pack must be installed in this orientation when the 10 SFF SAS/SATA/NVMe Combo backplane is installed.

Procedure

1. Power down the server (**Power down the server**).
2. Remove all power:
   a. Disconnect each power cord from the power source.
   b. Disconnect each power cord from the server.
3. Do one of the following:
   a. **Extend the server from the rack**.
   b. **Remove the server from the rack**.
4. **Remove the access panel**.
5. Remove the right retainer. Set aside.

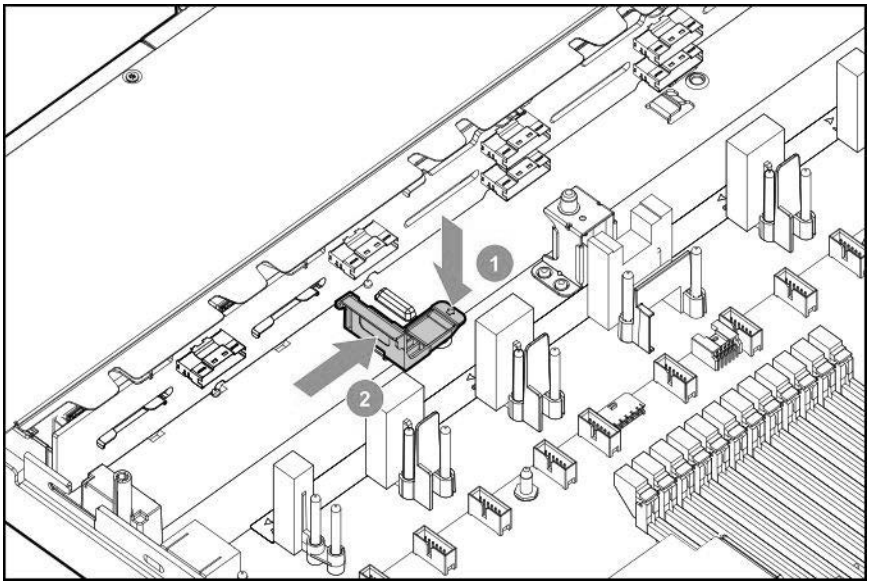

6. Slide the energy pack into the left retainer, and then install the right retainer.

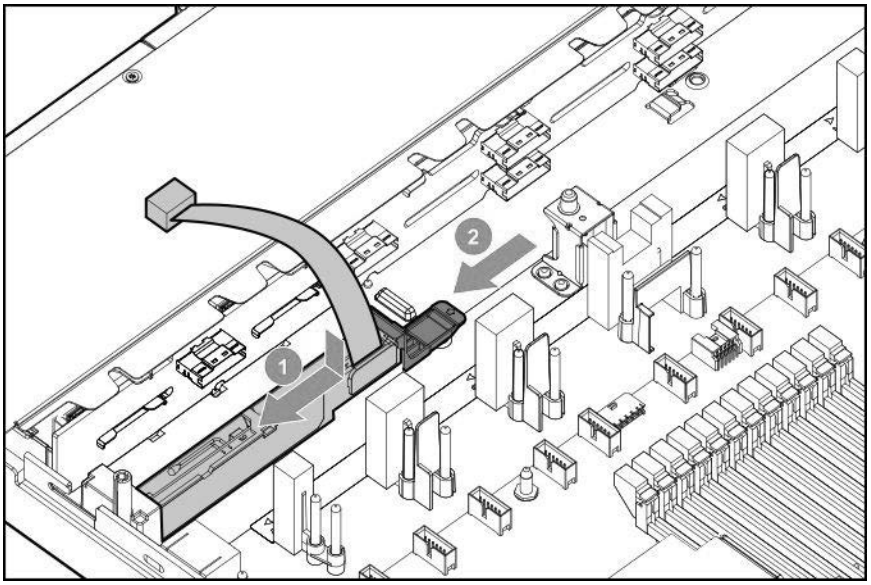

7. Connect the energy pack cable:

a. Remove the center fan baffle.

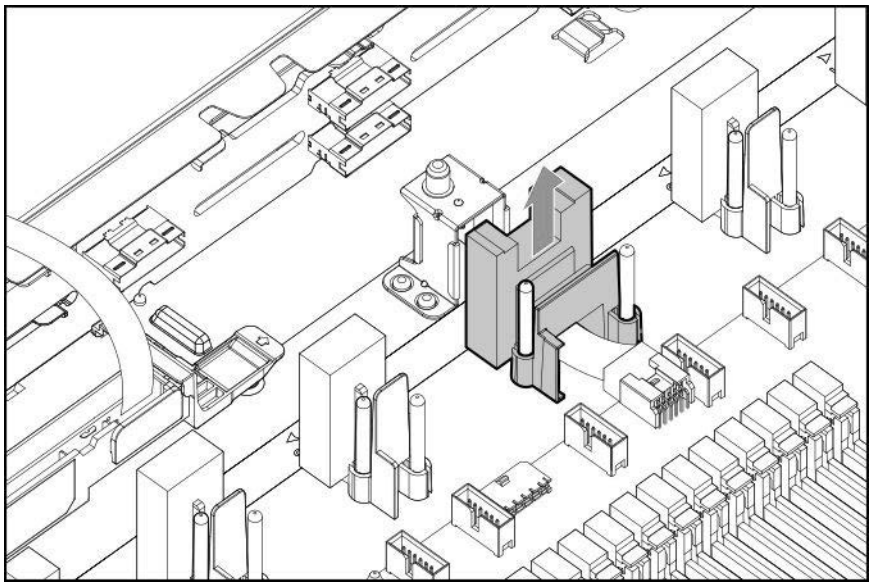

b. Connect the energy pack cable to the extender cable.

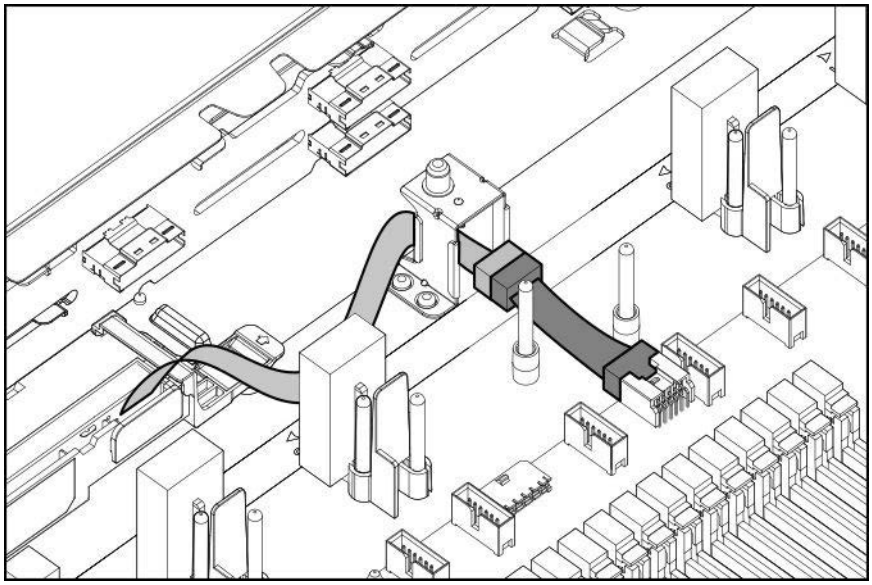

IMPORTANT: To enable SmartCache or CacheCade in a P-class type-p smart array controller, you must:

- Connect the controller backup power cable to the controller backup power connector on the system or riser board.
- Connect the energy pack cable to the energy pack connector on the system board.

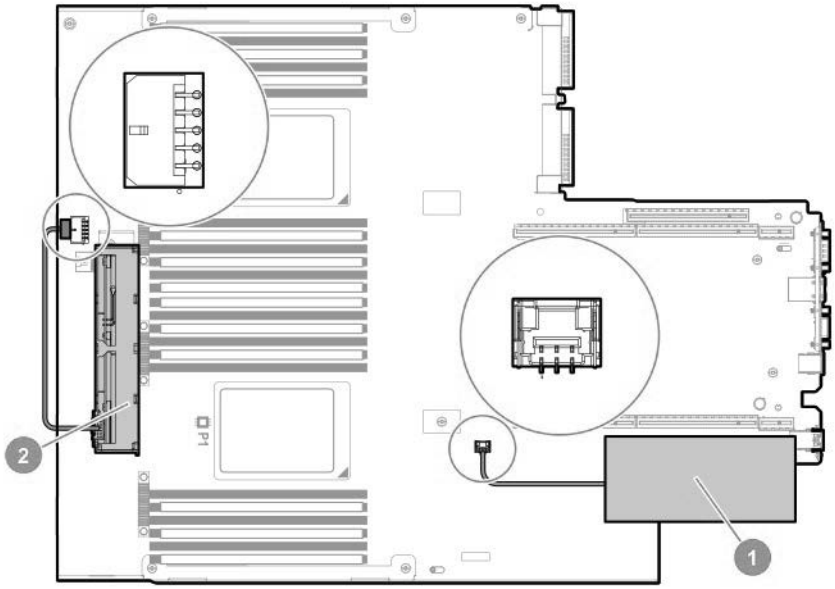

c. Install the center fan baffle.

8. Install the access panel (**Install the access panel**).

9. Install the server in the rack.

10. Connect each power cord to the server.

11. Connect each power cord to the power source.
12. **Power up the server.**

Installing an energy pack in 8 SFF and 4 LFF configurations

Prerequisites

Before installing this option, be sure you that have the components included with the hardware option kit.

Procedure

1. Power down the server (**Power down the server**).
2. Remove all power:
   a. Disconnect each power cord from the power source.
   b. Disconnect each power cord from the server.
3. Do one of the following:
   a. **Extend the server from the rack**.
   b. **Remove the server from the rack**.
4. **Remove the access panel**.
5. Install the energy pack and connect the energy pack cable.

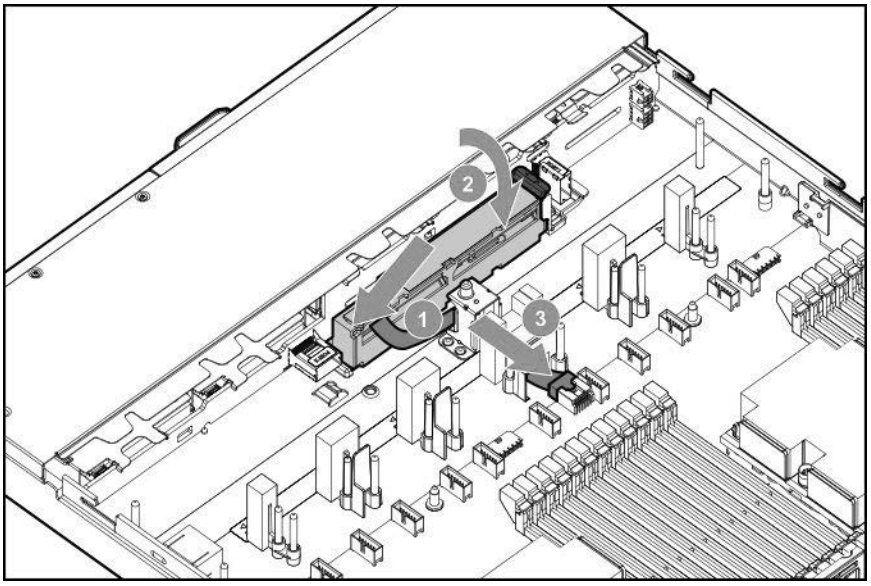

IMPORTANT: To enable SmartCache or CacheCade in a P-class type-p smart array controller, you must:

- Connect the controller backup power cable to the controller backup power connector on the system or riser board.
- Connect the energy pack cable to the energy pack connector on the system board.

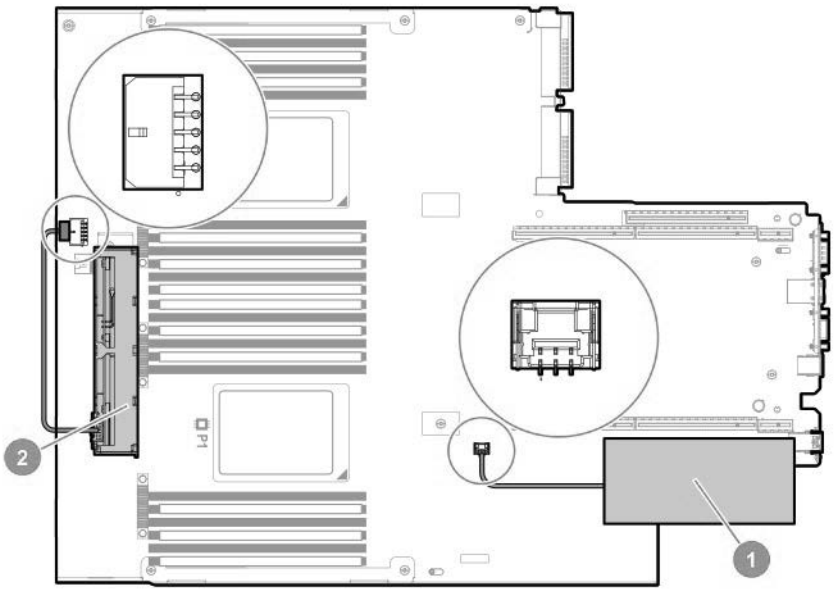

6. Install the access panel (**Install the access panel**).
7. Install the server in the rack.
8. Connect each power cord to the server.
9. Connect each power cord to the power source.
10. **Power up the server.**

Trusted Platform Module 2.0 option

Overview

Use these instructions to install and enable an TPM 2.0 Kit in a supported server.

This procedure includes three sections:

1. Installing the Trusted Platform Module board.
2. Enabling the Trusted Platform Module.
3. Retaining the recovery key/password.

TPM 2.0 installation is supported with specific operating system support such as Microsoft Windows Server 2012 R2 and later. For more information about Microsoft Windows BitLocker Drive Encryption feature, see the Microsoft website (**https://www.microsoft.com**).

CAUTION: If the TPM is removed from the original server and powered up on a different server, data stored in the TPM including keys will be erased.

IMPORTANT: In UEFI Boot Mode, the TPM 2.0 Kit can be configured to operate as TPM 2.0 (default) or TPM 1.2 on a supported server. In Legacy Boot Mode, the configuration can be changed between TPM 1.2 and TPM 2.0, but only TPM 1.2 operation is supported.

Trusted Platform Module 2.0 Guidelines

CAUTION: Always observe the guidelines in this document. Failure to follow these guidelines can cause hardware damage or halt data access.

When installing or replacing a TPM, observe the following guidelines:

- Do not remove an installed TPM. Once installed, the TPM is bound to the system board. If an OS is configured to use the TPM and it is removed, the OS may go into recovery mode, data loss can occur, or both.
- When installing or replacing hardware, Hitachi Vantara service providers cannot enable the TPM or the encryption technology. For security reasons, only the customer can enable these features.
- When returning a system board for service replacement, do not remove the TPM from the system board. When requested, Hitachi Vantara Service provides a TPM with the spare system board.
- Any attempt to remove the cover of an installed TPM from the system board can damage the TPM cover, the TPM, and the system board.
- If the TPM is removed from the original server and powered up on a different server, data stored in the TPM including keys will be erased.
- When using BitLocker, always retain the recovery key/password. The recovery key/password is required to complete Recovery Mode after BitLocker detects a possible compromise of system integrity or system configuration.
- Hitachi Vantara is not liable for blocked data access caused by improper TPM use. For operating instructions, see the TPM documentation or the encryption technology feature documentation provided by the operating system.

Installing and enabling the TPM 2.0 option

Installing the Trusted Platform Module Board and Preparing the server for installation

Procedure

1. Observe the following warnings:

   WARNING: The front panel Power On/Standby button does not shut off system power. Portions of the power supply and some internal circuitry remain active until AC power is removed.

   To reduce the risk of personal injury, electric shock, or damage to the equipment, remove power from the server:

   For rack and tower servers, remove the power cord.

WARNING: To reduce the risk of personal injury from hot surfaces, allow the drives and the internal system components to cool before touching them.

2. Update the system ROM.

   Locate and download the latest ROM version from **https://support.hitachivantara.com/en/user/answers/downloads.html#hardware-download**. Follow the instructions on the website to update the system ROM.

3. Power down the server (**Power down the server**).

4. Remove all power:

   a. Disconnect each power cord from the power source.

   b. Disconnect each power cord from the server.

5. Do one of the following:

   - Extend the server from the rack (**Extend the server from the rack**).
   - Remove the server from the rack (**Remove the server from the rack**).

6. Place the server on a flat, level work surface.

7. Remove the access panel (**Remove the access panel**).

8. If needed, remove any expansion boards installed in slot 3.

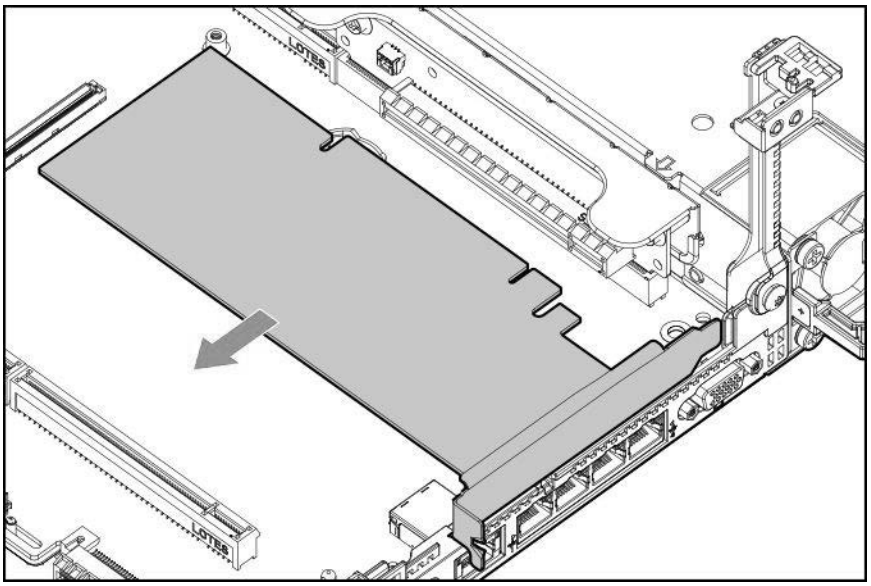

9. Remove the primary PCI riser cage (**Remove the primary PCI riser cage**).

10. Proceed to **Installing the TPM board and cover**.

Installing the TPM board and cover

Procedure

1. Observe the following alerts:

CAUTION: If the TPM is removed from the original server and powered up on a different server, data stored in the TPM including keys will be erased.

CAUTION: The TPM is keyed to install only in the orientation shown. Any attempt to install the TPM in a different orientation might result in damage to the TPM or system board.

2. Align the TPM board with the key on the connector, and then install the TPM board. To seat the board, press the TPM board firmly into the connector. To locate the TPM connector on the system board, see the server label on the access panel.

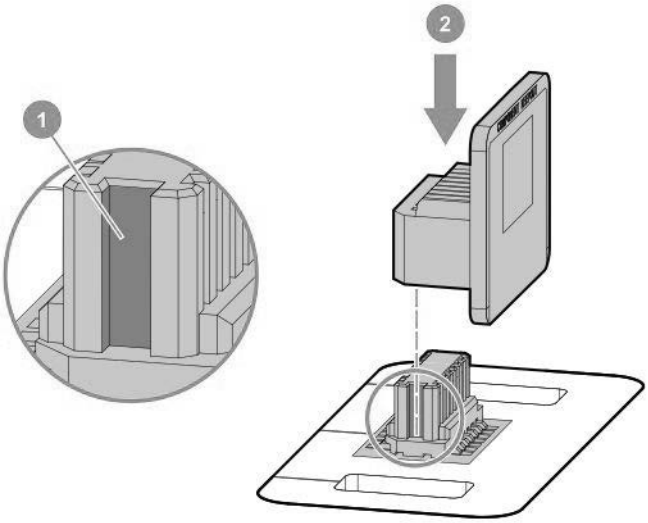

3. Install the TPM cover:

   a. Line up the tabs on the cover with the openings on either side of the TPM connector.

   b. To snap the cover into place, firmly press straight down on the middle of the cover.

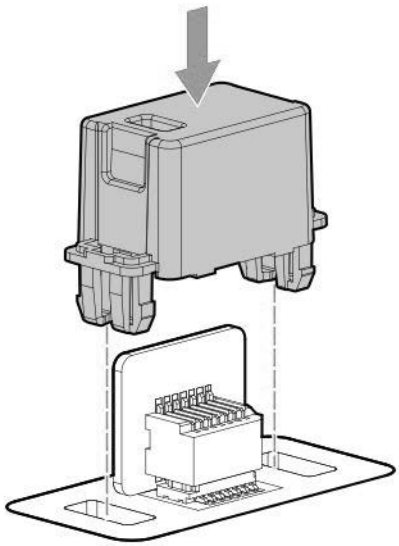

4. Proceed to **Preparing the server for operation**.

Preparing the server for operation

Procedure

1. Install any options or cables previously removed to access the TPM connector.
2. Install the access panel.
3. Do one of the following:
   a. Install the server in the rack, if necessary.
   b. Install the server in the enclosure.
4. Power up the server.
   a. Connect the power cords (rack and tower servers).
   b. Press the Power On/Standby button.

Enabling the Trusted Platform Module

When enabling the Trusted Platform module, observe the following guidelines:

- By default, the Trusted Platform Module is enabled as TPM 2.0 when the server is powered on after installing it.
- In UEFI Boot Mode, the Trusted Platform Module can be configured to operate as TPM 2.0 (default) or TPM 1.2.
- In Legacy Boot Mode, the Trusted Platform Module configuration can be changed between TPM 1.2 and TPM 2.0 (default), but only TPM 1.2 operation is supported.

Enabling the Trusted Platform Module as TPM 2.0

Procedure

1. During the server startup sequence, press the **F9** key to access **System Utilities**.
2. From the System Utilities screen, select **System Configuration** > **BIOS/Platform Configuration (RBSU)** > **Server Security** > **Trusted Platform Module options**.
3. Verify the following:
   - "Current TPM Type" is set to **TPM 2.0**.
   - "Current TPM State" is set to **Present and Enabled**.
   - "TPM Visibility" is set to **Visible**.
4. If changes were made in the previous step, press the **F10** key to save your selection.
5. If **F10** was pressed in the previous step, do one of the following:
   - If in graphical mode, click **Yes**.
   - If in text mode, press the **Y** key.
6. Press the **ESC** key to exit System Utilities.
7. If changes were made and saved, the server prompts for reboot request. Press the **Enter** key to confirm reboot.

If the following actions were performed, the server reboots a second time without user input. During this reboot, the TPM setting becomes effective.

- Changing from TPM 1.2 and TPM 2.0
- Changing TPM bus from FIFO to CRB
- Enabling or disabling TPM
- Clearing the TPM

8. Enable TPM functionality in the OS, such as Microsoft Windows BitLocker or measured boot. For more information, see the **Microsoft website**.

Enabling the Trusted Platform Module as TPM 1.2

Procedure

1. During the server startup sequence, press the **F9** key to access **System Utilities**.
2. From the System Utilities screen select **System Configuration** > **BIOS/Platform Configuration (RBSU)** > **Server Security** > **Trusted Platform Module options**.
3. Change the "TPM Mode Switch Operation" to **TPM 1.2**.
4. Verify that "TPM Visibility" is set to **Visible**.
5. Press the **F10** key to save your selection.
6. When prompted to save the change in System Utilities, do one of the following:
   - If in graphical mode, click **Yes**.
   - If in text mode, press the **Y** key.
7. Press the **ESC** key to exit System Utilities.

   The server reboots a second time without user input. During this reboot, the TPM setting becomes effective.
8. Enable TPM functionality in the OS, such as Microsoft Windows BitLocker or measured boot. For more information, see the **Microsoft website**.

Retaining the BitLocker recovery key/password

The recovery key/password is generated during BitLocker setup, and can be saved and printed after BitLocker is enabled. When using BitLocker, always retain the recovery key/password. The recovery key/password is required to enter Recovery Mode after BitLocker detects a possible compromise of system integrity.

To help ensure maximum security, observe the following guidelines when retaining the recovery key/password:

- Always store the recovery key/password in multiple locations.
- Always store copies of the recovery key/password away from the server.
- Do not save the recovery key/password on the encrypted hard drive.

Cabling

Cabling overview

This section provides guidelines that help you make informed decisions about cabling the server and hardware options to optimize performance.

CAUTION: When routing cables, always be sure that the cables are not in a position where they can be pinched or crimped.

SFF cables

Option kit	Cable part number	Connects from	Connects to
SFF P824i-p Cable Kit	876864-001	8 SFF SAS/SATA Backplane	Port 1i/2i on the P824i-p smart array Controller
	876865-002	2 SFF SAS/SATA Backplane	Port 3i on the P824i-p smart array Controller
	876866-002	10 SFF SAS/SATA Backplane	Port 1i/2i on the P824i-p smart array Controller
SFF Internal Cables Kit	874618-001	2 SFF SAS/SATA Backplane	Embedded SATA
	869662-001	8 SFF SAS/SATA Backplane	Embedded SATA Type -a smart array Controller
	876867-001	2 SFF SAS/SATA Backplane	Type -p smart array Controller (Slot 1)
	874615-001	8 SFF SAS/SATA Backplane	Type -p smart array Controller (Slot 2)
2 SFF Backplane Option Kit	876867-001	2 SFF SAS/SATA Backplane	Embedded SATA Type -p smart array Controller
	869669-001	2 SFF SAS/SATA Backplane	P816i-a smart array Controller
2 SFF SCM Backplane Option Kit	869668-001	2 SFF SCM Backplane	Embedded SATA
	869669-001	2 SFF SCM Backplane	P816i-a smart array Controller
		2 SFF SCM Backplane	Slot 1
1 SFF Rear Backplane Option Kit	869685-001	1 SFF Rear Backplane	Embedded SATA Type -p smart array Controller

Table Continued

Option kit	Cable part number	Connects from	Connects to
	876868-001	1 SFF Rear Backplane	P816i-a smart array Controller
10 SFF SAS/SATA/NVMe Combo backplane	869675-001	10 SFF backplane, SAS port	P408i-a controller
	869676-001	10 SFF backplane, ports 1, 2, and 3	NVMe riser, ports 1, 2, and 3
	869681-001	10 SFF backplane, port 5	NVMe riser, port 5
	869680-001	10 SFF backplane, port 4	NVMe riser, port 4

SFF configuration cable routing

NOTE: The following information describes the standard cable routing for this component. For more information, contact customer support.

SFF backplane to P824i-p controller

8 SFF to ports 1i/2i in the primary

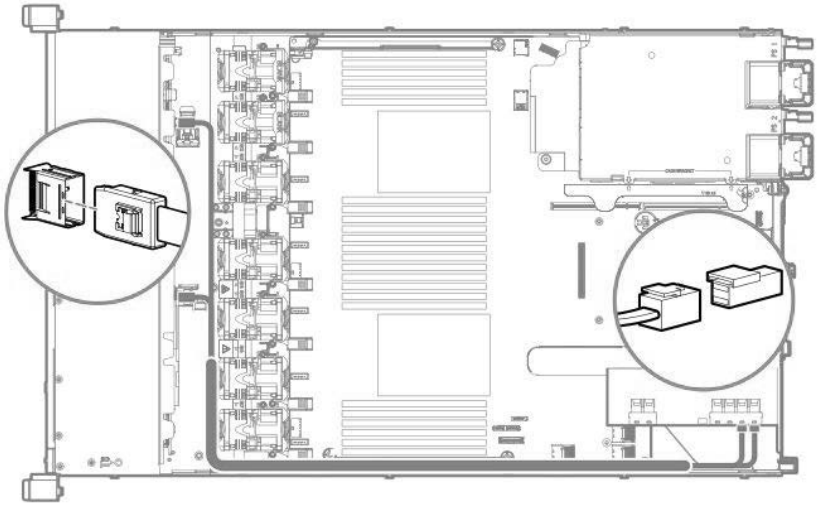

8 SFF to ports 1i/2i + 2 SFF to port 3i in the primary

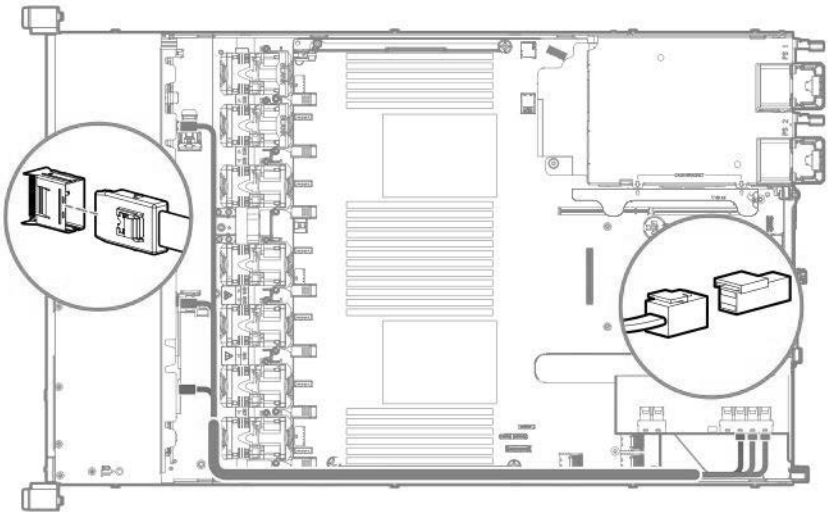

10 SFF premium backplane to ports 1i/2i in the primary

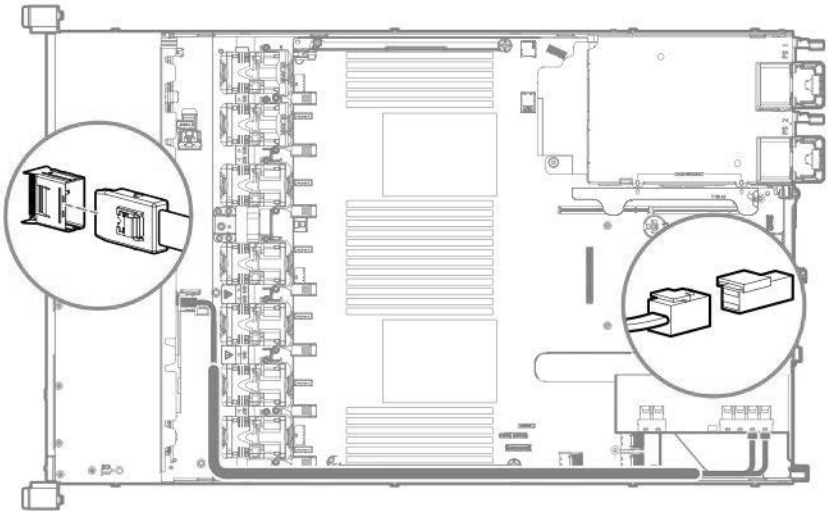

8 SFF backplane to a P408i-a/P816i-a controller

A P408i-a controller is shown, but the routing is the same for the P816i-a.

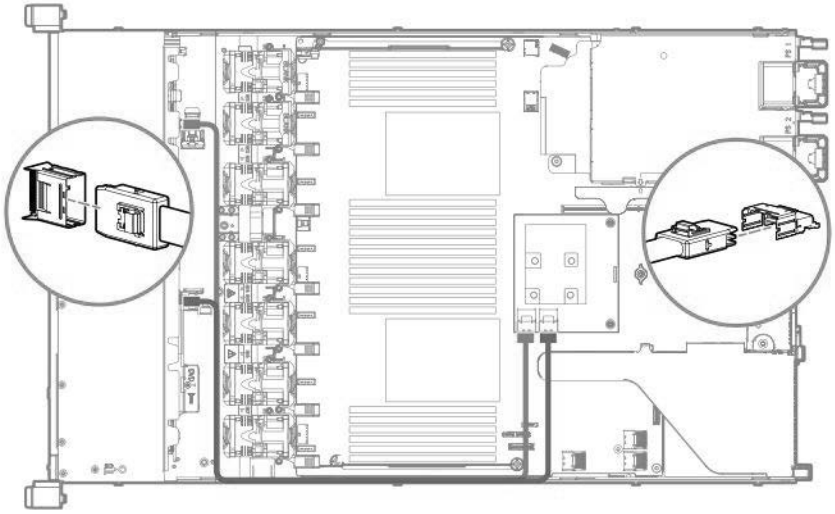

2 SFF backplane to P816i-a controller

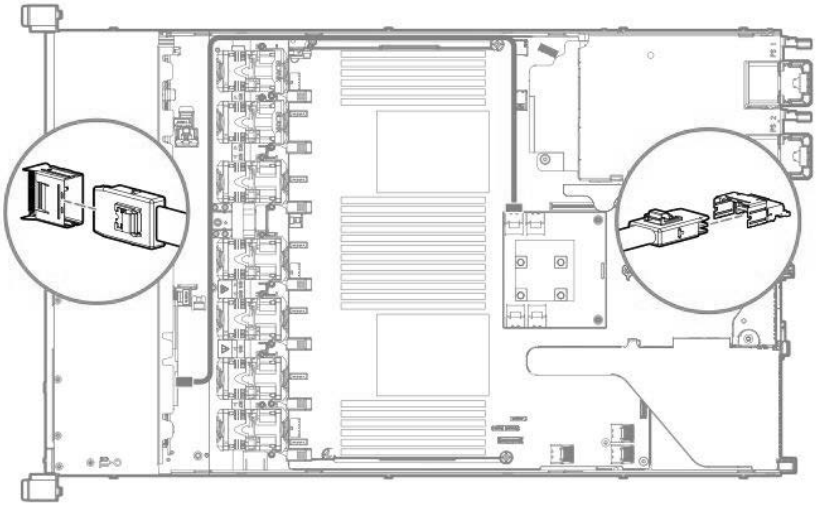

10 SFF NVMe backplane to NVMe riser

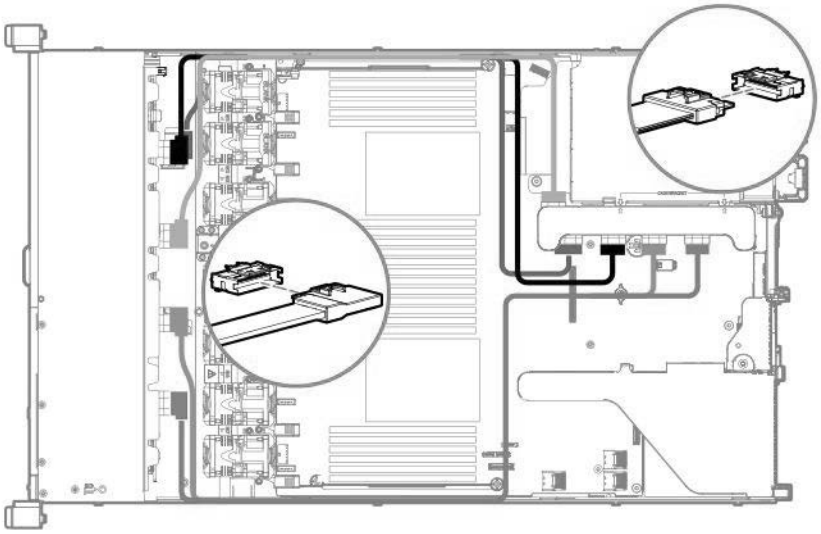

2 SFF NVMe backplane to primary riser

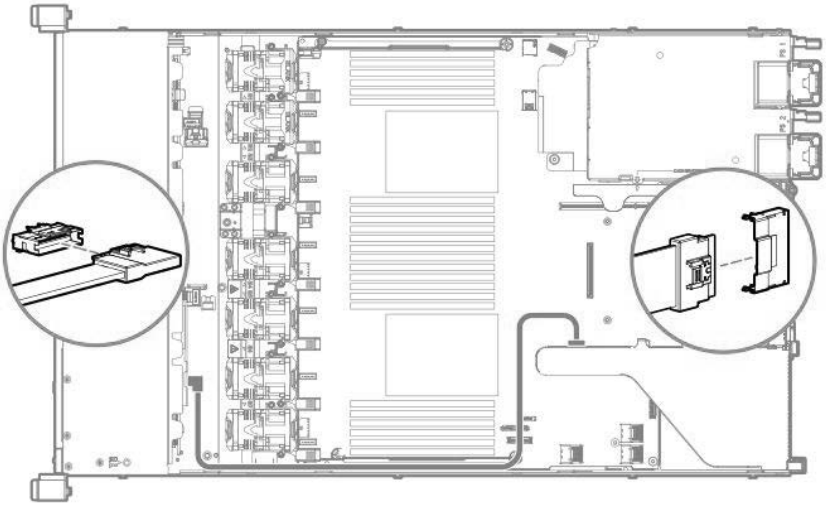

1 SFF rear backplane to system board SATA

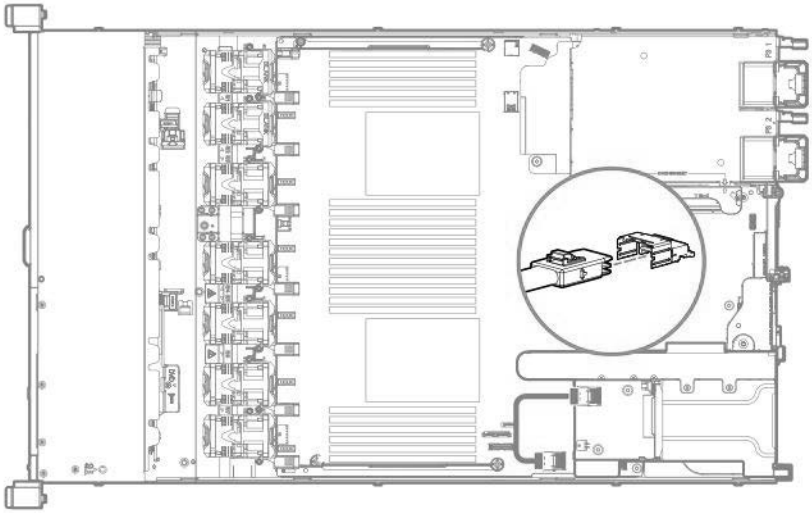

10 SFF backplane to P408i-a controller

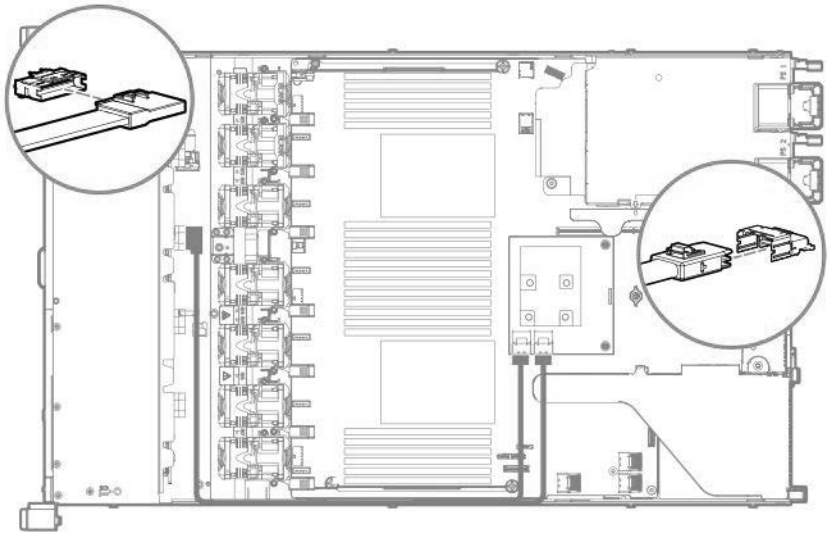

Additional SFF cabling

For more information on the following cables and cabling configurations. For more information, contact customer support.

- 8 SFF backplane to P408i-p controller
- 8 SFF backplane to system board SATA
- 8 SFF backplane power cable
- 2 SFF backplane to P408i-p controller
- 2 SFF backplane to system board SATA
- 2 SFF to 8 SFF power cable

- 1 SFF rear backplane to P816i-a controller
- SFF system power/USB cable

LFF cables

Option kit	Cable part number	Connects from	Connects to
HA800 LFF Internal Cable Kit	869673-001	4 LFF backplane	Type -p smart array controller, slot 1 Type -a smart array controller Embedded SATA

LFF configuration cable routing

NOTE: The following information describes the standard cable routing for this component. For more information on optional cable routing, contact customer support.

4 LFF backplane to P408i-a controller

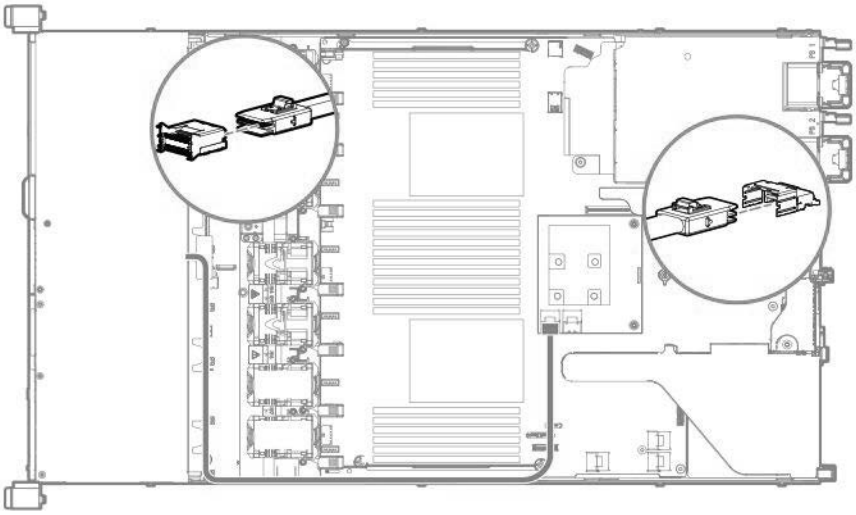

Additional LFF cabling

For more information on the following cables and cabling configurations, contact customer support.:

- 4 LFF backplane to P408i-p controller
- 4 LFF backplane to system board SATA

Software and configuration utilities

Server mode

The software and configuration utilities presented in this section operate in online mode, offline mode, or in both modes.

Software or configuration utility	Server mode
Active Health System	Online and Offline
iLO 5	Online and Offline
Smart Storage Administrator	Online and Offline
iLO RESTful API	Online and Offline
Intelligent Provisioning	Online and Offline
Service Pack for Advanced Server	Online and Offline
Smart update manager	Online and Offline
UEFI System Utilities	Offline
MR Storage Administrator	Offline
StorCLI	Offline

Active Health System

The Active Health System monitors and records changes in the server hardware and system

configuration. The Active Health System provides:

- Continuous health monitoring of over 1600 system parameters
- Logging of all configuration changes
- Consolidated health and service alerts with precise time stamps
- Agentless monitoring that does not affect application performance

For more information about the Active Health System, see the iLO user guide at the following website: **https://knowledge.hitachivantara.com/Documents/Servers**.

Active Health System data collection

The Active Health System does not collect information about your operations, finances, customers, employees, or partners.

Examples of information that is collected:

- Server model and serial number
- Processor model and speed
- Storage capacity and speed
- Memory capacity and speed
- Firmware/BIOS and driver versions and settings

The Active Health System does not parse or change OS data from third-party error event log activities (for example, content created or passed through the OS).

Active Health System Log

The data collected by the Active Health System is stored in the Active Health System Log. The data is logged securely, isolated from the operating system, and separate from customer data. Host resources are not consumed in the collection and logging of Active Health System data.

When the Active Health System Log is full, new data overwrites the oldest data in the log.

It takes less than 5 minutes to download the Active Health System Log and send it to a support professional to help you resolve an issue.

When you download and send Active Health System data to Hitachi Vantara, you agree to have the data used for analysis, technical resolution, and quality improvements. The data that is collected is managed according to the privacy statement, available at **https://www.hitachivantara.com/en-us/company/legal.privacy.html**.

iLO 5

iLO 5 is a remote server management processor embedded on the system boards of Hitachi Advanced Server products. iLO enables the monitoring and controlling of servers from remote locations. iLO management is a powerful tool that provides multiple ways to configure, update, monitor, and repair servers remotely. iLO (Standard) comes preconfigured on Hitachi Advanced Server products without an additional cost or license.

Features that enhance server administrator productivity and additional new security features are licensed. For more information, see the iLO licensing guide at the following website: **https://knowledge.hitachivantara.com/Documents/Servers**.

For more information about iLO, see the iLO user guide at the following website: **https://knowledge.hitachivantara.com/Documents/Servers**.

iLO Federation

iLO Federation enables you to manage multiple servers from one system using the iLO web interface.

When configured for iLO Federation, iLO uses multicast discovery and peer-to-peer communication to enable communication between the systems in iLO Federation groups.

When you navigate to one of the iLO Federation pages, a data request is sent from the iLO system running the web interface to its peers, and from those peers to other peers until all data for the selected iLO Federation group is retrieved.

iLO supports the following features:

- Group health status—View server health and model information.
- Group virtual media—Connect URL-based media for access by a group of servers.
- Group power control—Manage the power status of a group of servers.
- Group power capping—Set dynamic power caps for a group of servers.
- Group firmware update—Update the firmware of a group of servers.
- Group license installation—Enter a license key to activate iLO licensed features on a group of servers.
- Group configuration—Add iLO Federation group memberships for multiple iLO systems.

Any user can view information on iLO Federation pages, but a license is required for using the following features: Group virtual media, Group power control, Group power capping, Group configuration, and Group firmware update.

For more information about iLO Federation, see the iLO user guide at the following website: **https://knowledge.hitachivantara.com/Documents/Servers**.

iLO Service Port

The Service Port is a USB port with the label **iLO** on supported servers.

When you have physical access to a server, you can use the Service Port to do the following:

- Download the Active Health System Log to a supported USB flash drive.

  When you use this feature, the connected USB flash drive is not accessible by the host operating system.
- Connect a client (such as a laptop) with a supported USB to Ethernet adapter to access the following:

- iLO web interface
- Remote console
- iLO RESTful API
- CLI

Hitachi Vantara recommends the USB to Ethernet Adapter (part number Q7Y55A).

Some servers require an adapter to connect a USB to Ethernet adapter to the iLO Service Port. Hitachi Vantara recommends the Micro USB to USB Adapter (part number 789904-B21).

When you use the iLO Service Port:

- Actions are logged in the iLO event log.
- The server UID flashes to indicate the Service Port status.

  You can also retrieve the Service Port status by using a REST client and the iLO RESTful API.
- You cannot use the Service Port to boot any device within the server, or the server itself.
- You cannot access the server by connecting to the Service Port.
- You cannot access the connected device from the server.

For more information about the iLO Service Port, see the iLO user guide at the following website: **https://knowledge.hitachivantara.com/Documents/Servers**.

iLO RESTful API

iLO includes the iLO RESTful API, which is Redfish API conformant. The iLO RESTful API is a management interface that server management tools can use to perform configuration, inventory, and monitoring tasks by sending basic HTTPS operations (GET, PUT, POST, DELETE, and PATCH) to the iLO web server.

To learn more about the iLO RESTful API, contact customer support.

RESTful Interface Tool

The RESTful Interface Tool (iLOREST) is a scripting tool that allows you to automate server management tasks. It provides a set of simplified commands that take advantage of the iLO RESTful API. You can install the tool on your computer for remote use or install it locally on a server with a Windows or Linux Operating System. The RESTful Interface Tool offers an interactive mode, a scriptable mode, and a file-based mode similar to CONREP to help decrease automation times.

Intelligent Provisioning

Intelligent Provisioning is a single-server deployment tool embedded in Advanced Server. Intelligent Provisioning simplifies server setup, providing a reliable and consistent way to deploy servers.

NOTE: After you have selected a mode, you must reprovision the server to change the mode that launches when you boot to F10.

Intelligent Provisioning prepares the system for installing original, licensed vendor media and Hitachi Vantara -branded versions of OS software. Intelligent Provisioning also prepares the system to integrate optimized server support software from the Service Pack for Advanced Server (SPV). SPV is a comprehensive systems software and firmware solution for Advanced Server servers, their enclosures, and. These components are preloaded with a

basic set of firmware and OS components that are installed along with Intelligent Provisioning.

After the server is running, you can update the firmware to install additional components. You can also update any components that have been outdated since the server was manufactured.

To access Intelligent Provisioning:

- Press **F10** from the POST screen and enter Intelligent Provisioning.
- From the iLO web interface using **Always On**. **Always On** allows you to access Intelligent Provisioning without rebooting your server.

Intelligent Provisioning operation

NOTE: Intelligent Provisioning 3.40 and later requires iLO firmware version 2.10.

Intelligent Provisioning includes the following components:

- Critical boot drivers
- Active Health System (AHS)
- Erase Utility
- Deployment Settings

IMPORTANT:

- Although your server is preloaded with firmware and drivers, Hitachi Vantara recommends updating the firmware upon initial setup. Also, downloading and updating the latest version of Intelligent Provisioning ensures the latest supported features are available.
- For Advanced Server products, firmware is updated using the Intelligent Provisioning Firmware Update utility.
- Do not update firmware if the version you are currently running is required for compatibility.

NOTE: Intelligent Provisioning does not function within multihomed configurations. A multihomed host is one that is connected to two or more networks or has two or more IP addresses.

Intelligent Provisioning provides installation help for the following operating systems:

- Microsoft Windows Server
- Red Hat Enterprise Linux
- SUSE Linux Enterprise Server
- VMware ESXi/vSphere Custom Image
- ClearOS

Not all versions of an OS are supported. For information about specific versions of a supported operating system, see the OS Support Matrix on (**https://support.hitachivantara.com/en/user/answers/interoperability.html**).

Management security

HA800 and Hitachi Advanced Server products are built with some of the industry's most advanced security

capabilities, out of the box, with a foundation of secure embedded management applications and firmware. The management security provided by embedded management products enables secure support of modern workloads, protecting your components from unauthorized access and unapproved use. The range of embedded management and optional software and firmware available with the iLO Advanced license provides security features that help ensure protection, detection, and recovery from advanced cyber attacks. For more information, see the *Hitachi Advance ServerHA800 Security Reference Guide* at **https://knowledge.hitachivantara.com/Documents/Servers**.

UEFI System Utilities

The UEFI System Utilities is embedded in the system ROM. Its features enable you to perform a wide range of configuration activities, including:

- Configuring system devices and installed options.
- Enabling and disabling system features.
- Displaying system information.
- Selecting the primary boot controller or partition.
- Configuring memory options.
- Launching other preboot environments.

Servers with UEFI can provide:

- Support for boot partitions larger than 2.2 TB. Such configurations could previously only be used for boot drives when using RAID solutions.
- Secure Boot that enables the system firmware, option card firmware, operating systems, and software collaborate to enhance platform security.
- UEFI Graphical User Interface (GUI)
- An Embedded UEFI Shell that provides a preboot environment for running scripts and tools.
- Boot support for option cards that only support a UEFI option ROM.

Selecting the boot mode

This server provides two **Boot Mode** configurations: UEFI Mode and Legacy BIOS Mode. Certain boot options require that you select a specific boot mode. By default, the boot mode is set to **UEFI Mode**. The system must boot in **UEFI Mode** to use certain options, including:

- Secure Boot, UEFI Optimized Boot, Generic USB Boot, IPv6 PXE Boot, iSCSI Boot, and Boot from URL
- Fibre Channel/FCoE Scan Policy

NOTE: The boot mode you use must match the operating system installation. If not, changing the boot mode can impact the ability of the server to boot to the installed operating system.

Prerequisite

When booting to **UEFI Mode**, leave **UEFI Optimized Boot** enabled.

Procedure

1. From the **System Utilities** screen, select **System Configuration** > **BIOS/Platform Configuration (RBSU)** > **Boot Options** > **Boot Mode**.
2. Select a setting.
   - **UEFI Mode** (default)—Configures the system to boot to a UEFI compatible operating system.
   - **Legacy BIOS Mode**—Configures the system to boot to a traditional operating system in Legacy BIOS compatibility mode.
3. Save your setting.
4. Reboot the server.

Secure Boot

Secure Boot is a server security feature that is implemented in the BIOS and does not require special hardware. Secure Boot ensures that each component launched during the boot process is digitally signed and that the signature is validated against a set of trusted certificates embedded in the UEFI BIOS. Secure Boot validates the software identity of the following components in the boot process:

- UEFI drivers loaded from PCIe cards
- UEFI drivers loaded from mass storage devices
- Preboot UEFI Shell applications
- OS UEFI boot loaders

When secure Boot is enabled:

- Firmware components and operating systems with boot loaders must have an appropriate digital signature to execute during the boot process.
- Operating systems must support Secure Boot and have an EFI boot loader signed with one of the authorized keys to boot. For the latest information about supported operating systems, see **https://support.hitachivantara.com/en/user/answers/interoperability.html**.

You can customize the certificates embedded in the UEFI BIOS by adding or removing your own certificates, either from a management console directly attached to the server, or by remotely connecting to the server using the iLO Remote Console.

You can configure Secure Boot:

- Using the **System Utilities** options described in the following sections.
- Using the iLO RESTful API to clear and restore certificates. For more information, contact customer support.
- Using the `secboot` command in the Embedded UEFI Shell to display Secure Boot databases, keys, and security reports.

Launching the Embedded UEFI Shell

Use the **Embedded UEFI Shell** option to launch the Embedded UEFI Shell. The Embedded UEFI Shell is a preboot command-line environment for scripting and running UEFI applications, including UEFI boot loaders. The Shell also provides CLI-based commands you can use to obtain system information, and to configure and update the

system BIOS.

Prerequisites

Embedded UEFI Shell is set to **Enabled**.

Procedure

1. From the **System Utilities** screen, select **Embedded Applications** > **Embedded UEFI Shell**. The **Embedded UEFI Shell** screen appears.
2. Press any key to acknowledge that you are physically present.

   This step ensures that certain features, such as disabling **Secure Boot** or managing the **Secure Boot** certificates using third-party UEFI tools, are not restricted.
3. If an administrator password is set, enter it at the prompt and press **Enter**. The `Shell>` prompt appears.
4. Enter the commands required to complete your task.
5. Enter the `exit` command to exit the Shell.

Smart Storage Administrator

SSA is the main tool for configuring arrays on smart array SR controllers. It exists in three interface formats: the SSA GUI, the SSA CLI, and SSA Scripting. All formats provide support for configuration tasks. Some of the advanced tasks are available in only one format.

The diagnostic features in SSA are also available in the standalone software Smart Storage Administrator Diagnostics Utility CLI.

During the initial provisioning of the server, an array is required to be configured before the operating system can be installed. You can configure the array using SSA.

SSA is accessible both offline (either through Intelligent Provisioning or as a standalone bootable ISO image) and online:

- Accessing SSA in the offline environment

  IMPORTANT: If you are updating an existing server in an offline environment, obtain the latest version of SSA through Service Pack for Advanced Server before performing configuration procedures.

  Using one of multiple methods, you can run SSA before launching the host operating system. In offline mode, users can configure or maintain detected and supported devices, such as optional smart array controllers and integrated smart array controllers. Some SSA features are only available in the offline environment, such as setting the boot controller and boot volume.
- Accessing SSA in the online environment

  This method requires an administrator to download the SSA executables and install them. You can run SSA online after launching the host operating system.

For more information, see *Smart array SR Configuration Guide*.

MR Storage Administrator

MR Storage Administrator is a web-based application that enables you to monitor, configure, maintain, and troubleshoot the smart array MR controller. MR Storage Administrator enables you to view, create, and manage storage configurations.

IMPORTANT: The MR Storage Administrator manages **only** the smart array MR controllers. It does not manage smart array SR controllers.

- **Monitoring and configuring:** MR Storage Administrator enables you to monitor the controllers and configure the drives on the controller. It displays the status of the controller cards, logical drives, and drives on the controller. The device status icons notify you if there are drive failures and other events that require your immediate attention. Email notifications about the status of the server are sent based on your alert settings. The system errors and events are recorded and displayed in an event log file. You can also import or clear foreign configurations.

  IMPORTANT: Limited alerting and monitoring is available through iLO when Agentless Management Service is installed. The smart array P824i-p MR controller supports limited alerts through iLO using the AMS agent.

- **Maintaining**: Using MR Storage Administrator, you can perform system maintenance tasks, such as updating the controller firmware.
- **Troubleshooting**: MR Storage Administrator displays information related to drive failures, device failures, and other issues. It also provides recommendations and displays contextual links, helping you to locate the drives/devices that have issues and troubleshoot them. You can also download a report of the devices and their configurations, properties, and settings and send it to Hitachi Vantara support for further troubleshooting.

Obtain MR Storage Administrator installation files through the Service Pack for Advanced Server, or SPV, which you can download from the (**https://support.hitachivantara.com/en/user/answers/downloads.html#hardware-download**). Be sure to use the latest SPP version for the server.

StorCLI

The Storage Command Line Interface (StorCLI) tool is the command line management software designed for the smart array MR controller. StorCLI is a command line interface that is designed to be easy to use, consistent, and easy to script.

Obtain StorCLI through the Service Pack for Advanced Server, or SPV, which you can download from **https://support.hitachivantara.com/en/user/answers/downloads.html#hardware-download**. Be sure to use the latest SPV version for the server.

USB support

HA800 servers support all USB operating speeds depending on the device that is connected to the server.

External USB functionality

Hitachi Vantara provides external USB support to enable local connection of USB devices for server administration, configuration, and diagnostic procedures.

For additional security, external USB functionality can be disabled through USB options in UEFI System Utilities.

Redundant ROM support

The server enables you to upgrade or configure the ROM safely with redundant ROM support. The server has a single ROM that acts as two separate ROM images. In the standard implementation, one side of the ROM contains the current ROM program version, while the other side of the ROM contains a backup version.

NOTE: The server ships with the same version programmed on each side of the ROM.

Safety and security benefits

When you flash the system ROM, the flashing mechanism writes over the backup ROM and saves the current ROM as a backup, enabling you to switch easily to the alternate ROM version if the new ROM becomes corrupted for any reason. This feature protects the existing ROM version, even if you experience a power failure while flashing the ROM.

Keeping the system current

Updating firmware or system ROM

To update firmware or system ROM, use one of the following methods:

- The **Firmware Update** option in the System Utilities.
- The `fwupdate` command in the **Embedded UEFI Shell**.
- Service Pack for Advanced Server (SPV)
- Online flash components
- Moonshot Component Pack

Service Pack for Advanced Server

SPV is a systems software and firmware solution delivered as a single ISO file download. This solution uses SUM as the deployment tool and is tested and supports Hitachi Advanced Server, and infrastructure.

SPV, along with SUM and iSUT, provides Smart Update system maintenance tools that systematically update Hitachi Advanced Server and infrastructure.

SPV can be used in an online mode on a server running Windows, Linux, or VMware vSphere ESXi, or in an offline mode where the server is booted to an operating system included in the ISO file.

The SPV is also available for download from the SPV download page at **https://support.hitachivantara.com/en/user/answers/downloads.html#hardware-download**.

Smart update manager

SUM is an innovative tool for maintaining and updating the firmware, drivers, and system software of Hitachi Advanced Server, infrastructure, and associated options.

SUM identifies associated nodes you can update at the same time to avoid interdependency

issues. Key features of SUM include:

- Discovery engine that finds installed versions of hardware, firmware, and software on nodes.
- SUM deploys updates in the correct order and ensures that all dependencies are met before deploying an update.
- Interdependency checking.
- Automatic and step-by-step Localhost Guided Update process.
- Web browser-based user interface.
- Ability to create custom baselines and ISOs.
- Support for iLO Repository (HA800 or later iLO 5 nodes only).
- Simultaneous firmware and software deployment for multiple remote nodes.
- Local offline firmware deployments with SPV deliverables.
- Extensive logging in all modes.

NOTE: SUM does not support third-party controllers, including flashing hard drives behind the controllers.

Updating firmware from the System Utilities

Use the **Firmware Updates** option to update firmware components in the system, including the system BIOS, NICs, and storage cards.

Procedure

1. Access the System ROM Flash Binary component for your server from the Hitachi Vantara Support Center.
2. Copy the binary file to a USB media or iLO virtual media.
3. Attach the media to the server.
4. Launch the **System Utilities** and select **Embedded Applications** > **Firmware Update**.
5. Select a device.

   The **Firmware Updates** screen lists details about your selected device, including the current firmware version in

use.

6. Select **Select Firmware File**.
7. Select the flash file in the **File Explorer** list.

   The firmware file is loaded and the **Firmware Updates** screen lists details of the file in the **Selected firmware file** field.
8. Select **Image Description**, and then select a firmware

   image. A device can have multiple firmware images.
9. Select **Start firmware update**.

Updating the firmware from the UEFI Embedded Shell

Procedure

1. Access the System ROM Flash Binary component for your server from the Hitachi Vantara Support Center (**https://support.hitachivantara.com/en/user/answers/downloads.html#hardware-download**).
2. Copy the binary file to a USB media or iLO virtual media.
3. Attach the media to the server.
4. Boot to the UEFI Embedded Shell.
5. To obtain the assigned file system volume for the USB key, enter `map -r`.
6. Change to the file system that contains the System ROM Flash Binary component for your server. Enter one of the
   `fsx` file systems available, such as `fs0:` or `fs1:`, and press **Enter**.
7. Use the `cd` command to change from the current directory to the directory that contains the binary file.
8. Flash the system ROM by entering `fwupdate -d BIOS -f` *`filename`*.
9. Reboot the server. A reboot is required after the firmware update in order for the updates to take effect and for hardware stability to be maintained.

Online Flash components

This component provides updated system firmware that can be installed directly on supported operating systems. Additionally, when used in conjunction with SUM, this Smart Component allows the user to update firmware on remote servers from a central location. This remote deployment capability eliminates the need for the user to be physically present at the server to perform a firmware update.

Drivers

IMPORTANT: Always perform a backup before installing or updating device drivers.

Update drivers using any of the following **Smart Update Solutions**:

- Download the latest Service Pack for Advanced Server (includes smart update manager)
- Download the smart update manager for Linux
- Download specific drivers

  To locate the drivers for a server, go to

https://support.hitachivantara.com/en/user/answers/downloads.html#hardware-download, and then search for the product name/number

Software and firmware

Update software and firmware before using the server for the first time, unless any installed software or components require an older version.

For system software and firmware updates, use one of the following sources:

- Download the SPV from the Hitachi Vantara website (**https://support.hitachivantara.com/en/user/answers/downloads.html#hardware-download**).
- Download individual drivers, firmware, or other system software components from the server product page in the Hitachi Vantara Support Center website (**https://support.hitachivantara.com/en/user/answers/downloads.html#hardware-download**).

Operating system version support

For information about specific versions of a supported operating system, see **https://support.hitachivantara.com/en/user/answers/interoperability.html**.

Utilize the Advisory and Transformation Services in the following areas:

- Private or hybrid cloud computing
- Big data and mobility requirements
- Improving data center infrastructure
- Better use of server, storage, and networking technology

Troubleshooting

Troubleshooting resources

Troubleshooting resources are available for HA800 server products in the following documents:

- *Troubleshooting Guide for Hitachi Advanced Server HA800* provides procedures for resolving common problems and comprehensive courses of action for fault isolation and identification, issue resolution, and software maintenance.
- *Error Message Guide for Hitachi Advanced Server HA800* provides a list of error messages and information to assist with interpreting and resolving error messages.
- *Error Message Guide for Hitachi Advanced Server products* provides a list of error messages and information to assist with interpreting and resolving error messages.

To access troubleshooting resources for your product, see the Hitachi Vantara:

- For HA800 servers, see **https://knowledge.hitachivantara.com/Documents/Servers/Advanced_Server**.

Removing and replacing the system battery

The system battery provides power to the real-time clock. If the server no longer automatically displays the correct date and time, you might need to replace the system battery.

WARNING: The computer contains an internal lithium manganese dioxide, a vanadium pentoxide, or an alkaline battery pack. A risk of fire and burns exists if the battery pack is not properly handled. To reduce the risk of personal injury:

- Do not attempt to recharge the battery.
- Do not expose the battery to temperatures higher than 60°C (140°F).
- Do not disassemble, crush, puncture, short external contacts, or dispose of in fire or water.
- Replace only with the spare designated for this product.

Procedure

1. Power down the server (**Power down the server**).
2. Remove all power:
   - Disconnect each power cord from the power source.
   - Disconnect each power cord from the server.
3. Do one of the following:
   a. Extend the server from the rack (**Extend the server from the rack**).
   b. Remove the server from the rack (**Remove the server from the rack**).
4. Remove the access panel (**Remove the access panel**).
5. Locate the battery (**System board components**).
6. Remove the battery.

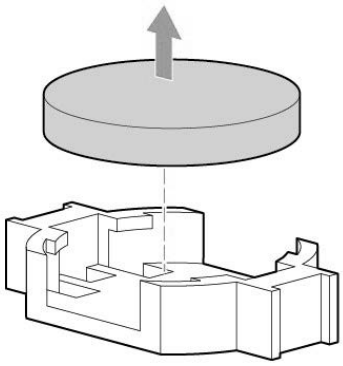

7. To replace the component, reverse the removal procedure.
8. Properly dispose of the old battery.

   For more information about battery replacement or proper disposal, contact an authorized reseller or an authorized service provider.

Specifications

Environmental specifications

Specification	Value
Temperature range[1]	—
Operating	10°C to 35°C (50°F to 95°F)
Nonoperating	-30°C to 60°C (-22°F to 140°F)
Relative humidity (noncondensing) —	
Operating	Minimum to be the higher (more moisture) of -12°C (10.4°F) dew point or 8% relative humidity Maximum to be 24°C (75.2°F) dew point or 90% relative humidity
Nonoperating	5% to 95% 38.7°C (101.7°F), maximum wet bulb temperature

[1] All temperature ratings shown are for sea level. An altitude derating of 1.0°C per 304.8 m (1.8°F per 1000 ft) to 3048 m (10,000 ft) is applicable. No direct sunlight allowed. Maximum rate of change is 20°C per hour (36°F per hour). The upper limit and rate of change might be limited by the type and number of options installed.

For certain approved hardware configurations, the supported system inlet temperature range is extended:

- 5°C to 10°C (41°F to 50°F) and 35°C to 40°C (95°F to 104°F) at sea level with an altitude derating of 1.0°C per every 175 m (1.8°F per every 574 ft) above 900 m (2953 ft) to a maximum of 3048 m (10,000 ft).
- 40°C to 45°C (104°F to 113°F) at sea level with an altitude derating of 1.0°C per every 125 m (1.8°F per every 410 ft) above 900 m (2953 ft) to a maximum of 3048 m (10,000 ft).

For information about approved hardware configurations, contact customer support.

Server specifications

Specification	Value
Height	4.29 cm (1.69 in)
Depth (chassis with SFF drive cage)	70.7 cm (27.83
in) Depth (chassis with LFF drive cage)	74.98 cm
(29.50 in) Width	43.46 cm (17.11
in)	
Weights	

Table Continued

Specification	Value
SFF minimum (one drive, one processor, one power supply, two heatsinks, one smart array controller, five fans)	13.04 kg (28.74 lb)
SFF maximum (10 drives, two processors, two power supplies, two heatsinks, one smart array controller, seven fans)	16.27 kg (35.86 lb)
LFF minimum (one drive, one processor, one power supply, two heatsinks, one smart array controller, five fans)	13.77 kg (30.36 lb)
LFF maximum (Four drives, two processors, two power supplies, two heatsinks, one smart array controller, seven fans)	16.78 kg (37 lb)

Power supply specifications

Depending on the installed options and the regional location where the server was purchased, the server can be configured with one of the following power supplies:

- **500W Flex Slot Platinum Hot-plug Low Halogen Power Supply**
- **800W Flex Slot Platinum Hot-plug Low Halogen Power Supply**
- **800W Flex Slot Titanium Hot-plug Low Halogen Power Supply**
- **800W Flex Slot Universal Hot-plug Low Halogen Power Supply**
- **800W Flex Slot -48VDC Hot-plug Low Halogen Power Supply**
- **1600W Flex Slot Platinum Hot-plug Low Halogen Power Supply**

500W Flex Slot Platinum Hot-plug Low Halogen Power Supply

Specification	Value
Input requirements	—
Rated input voltage	100 VAC to 240 VAC 240 VDC for China only

Specification	Value
Rated input frequency	50 Hz to 60 Hz Not applicable to 240 VDC
Rated input current	5.6 A at 100 VAC 2.7 A at 200 VAC 2.3 A at 240 VDC for China only
Maximum rated input power	557 W at 100 VAC 539 W at 200 VAC 537 W at 240 VDC for China only
BTUs per hour	1902 at 100 VAC 1840 at 200 VAC 1832 at 240 VDC for China only
Power supply output	—
Rated steady-state power	500 W at 100 VAC to 127 VAC input 500 W at 100 VAC to 240 VAC input 500 W at 240 VDC input for China only
Maximum peak power	500 W at 100 VAC to 127 VAC input 500 W at 100 VAC to 240 VAC input 500 W at 240 VDC input for China only

800W Flex Slot Platinum Hot-plug Low Halogen Power Supply

Specification	Value
Input requirements	—
Rated input voltage	100 VAC to 127 VAC 200 VAC to 240 VAC 240 VDC for China only
Rated input frequency	50 Hz to 60 Hz

Specification	Value
	Not applicable to 240 VDC
Rated input current	9.1 A at 100 VAC 4.4 A at 200 VAC 3.6 A at 240 VDC for China only
Maximum rated input power	899 W at 100 VAC 867 W at 200 VAC 864 W at 240 VDC for China only
BTUs per hour	3067 at 100 VAC 2958 at 200 VAC 2949 at 240 VAC for China only
Power supply output	—
Rated steady-state power	800 W at 100 VAC to 127 VAC input 800 W at 100 VAC to 240 VAC input 800 W at 240 VDC input for China only
Maximum peak power	800 W at 100 VAC to 127 VAC input 800 W at 100 VAC to 240 VAC input 800 W at 240 VDC input for China only

800W Flex Slot Titanium Hot-plug Low Halogen Power Supply

Specification	Value
Input requirements	—
Rated input voltage	200 VAC to 240 VAC 240 VDC for China only
Rated input frequency	50 Hz to 60 Hz Not applicable to 240 VDC
Rated input current	4.35 A at 200 VAC 3.62 A at 240 VAC 3.62 A at 240 VDC for China only

Specification	Value
Maximum rated input power	851 W at 200 VAC 848 W at 240 VAC 848 W at 240 VDC for China only
BTUs per hour	2905 at 200 VAC 2893 at 240 VAC 2893 at 240 VDC for China only
Power supply output	—
Rated steady-state power	800 W at 200 VAC to 240 VAC input 800 W at 240 VDC input for China only
Maximum peak power	800 W at 200 VAC to 240 VAC input 800 W at 240 VDC input for China only

800W Flex Slot Universal Hot-plug Low Halogen Power Supply

Specification	Value
Input requirements	—
Rated input voltage	200 VAC to 277 VAC 380 VDC
Rated input frequency	50 Hz to 60 Hz
Rated input current	4.4 A at 200 VAC 3.1 A at 277 VAC 2.3 A at 380 VDC
Maximum rated input power	869 W at 200 VAC 865 W at 230 VAC 861 W at 277 VAC 863 W at 380 VDC

Specification	Value
BTUs per hour	2964 at 200 VAC 2951 at 230 VAC 2936 at 277 VAC 2943 at 380 VDC
Power supply output	—
Rated steady-state power	800 W at 200 VAC to 277 VAC input
Maximum peak power	800 W at 200 VAC to 277 VAC input

800W Flex Slot -48VDC Hot-plug Low Halogen Power Supply

Specification	Value
Input requirements	—
Rated input voltage	-40 VDC to -72 VDC -48 VDC nominal input
Rated input current	22.1 A at -40 VDC input 18.2 A at -48 VDC input, nominal input 12.0 A at -72 VDC input
Rated input power (W)	874 W at -40 VDC input 865 W at -48 VDC input, nominal input 854 W at -72 VDC input
Rated input power (BTUs per hour)	2983 at -40 VDC input 2951 at -48 VDC input, nominal input 2912 at -72 VDC input
Power supply output	—
Rated steady-state power (W)	800 W at -40 VDC to -72 VDC
Maximum peak power (W)	800 W at -40 VDC to -72 VDC
Maximum peak power	800 W at -40 VDC to -72 VDC input

WARNING: To reduce the risk of electric shock or energy hazards:

- This equipment must be installed by trained service personnel.
- Connect the equipment to a reliably grounded secondary circuit source. A secondary circuit has no direct connection to a primary circuit and derives its power from a transformer, converter, or equivalent isolation device.
- The branch circuit overcurrent protection must be rated 27 A.

CAUTION: This equipment is designed to permit the connection of the earthed conductor of the DC supply circuit to the earthing conductor at the equipment.

If this connection is made, all of the following must be met:

- This equipment must be connected directly to the DC supply system earthing electrode conductor or to a bonding jumper from an earthing terminal bar or bus to which the DC supply system earthing electrode conductor is connected.
- This equipment must be located in the same immediate area (such as adjacent cabinets) as any other equipment that has a connection between the earthed conductor of the same DC supply circuit and the earthing conductor, and also the point of earthing of the DC system. The DC system must be earthed elsewhere.
- The DC supply source is to be located within the same premises as the equipment.
- Switching or disconnecting devices must not be in the earthed circuit conductor between the DC source and the point of connection of the earthing electrode conductor.

1600W Flex Slot Platinum Hot-plug Low Halogen Power Supply

Specification	Value
Input requirements	
Rated input voltage	200 VAC to 240 VAC 240 VDC for China only
Rated input frequency	50 Hz to 60 Hz
Rated input current	8.7 A at 200 VAC 7.2 A at 240 VAC
Maximum rated input power	1734 W at 200 VAC 1725 W at 240 VAC
BTUs per hour	5918 at 200 VAC

	5884 at 240 VAC

Power supply output	
Specification	**Value**
Rated steady-state power	1600 W at 200 VAC to 240 VAC input 1600 W at 240 VDC input
Maximum peak power	2200 W for 1 ms (turbo mode) at 200 VAC to 240 VAC input

Hitachi Vantara

Corporate Headquarters
2535 Augustine Drive
Santa Clara, CA 95054 USA
HitachiVantara.com | community.HitachiVantara.com

Contact Information
USA: 1-800-446-0744
Global: 1-858-547-4526
HitachiVantara.com/contact